ROCKFORD SYSTEMS, LLC

The Trusted Choice for Machine Safety

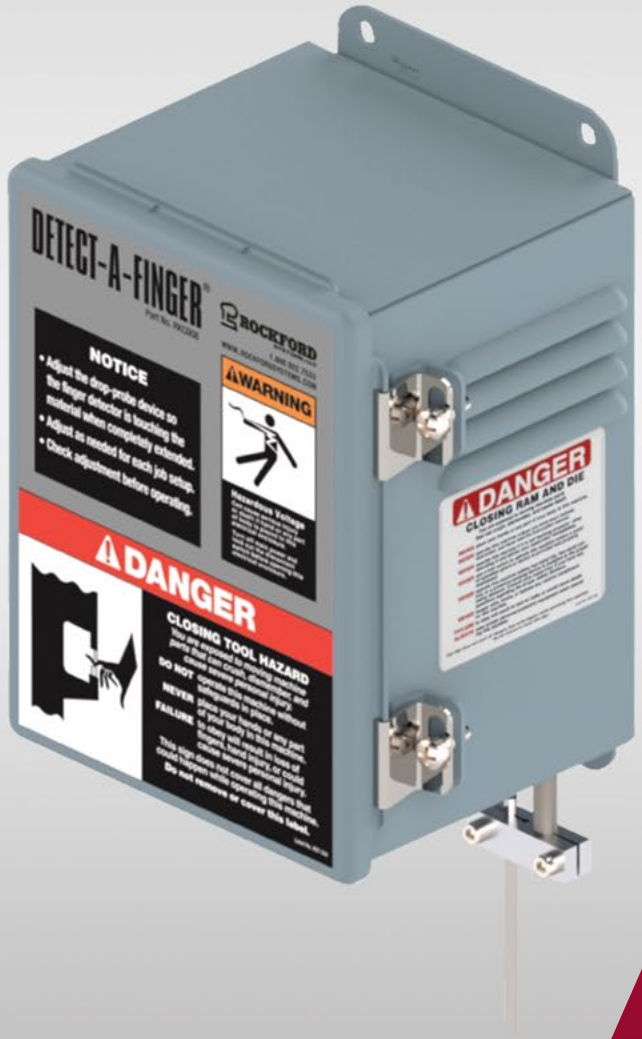

SAFEGUARDING DEVICES

FOR INDUSTRIAL MACHINES

1-800-922-7533 | www.rockfordsystems.com

PRESENCE-SENSING DEVICES **3-4**
STOP-TIME MEASUREMENT DEVICE **5-6**
QUICK REFERENCE GUIDES **7**
POINT-OF-OPERATION LIGHT CURTAIN SYSTEM **8-14**
Protector™ Series Shield Systems 8-9
EZ-Screen Light Curtain System 10-11
EZ-Screen Dimensions 12
EZ-Screen Response Times 12
Selecting a Noncascading EZ-Screen Light Curtain 13
Remote Fixed Blanking Switch 13
Selecting a Cascading EZ-Screen Light Curtain 14-15
Remote Operator Stations 16
Laser Alignment Tool 16
PERIMETER LIGHT BEAM SYSTEM **17-19**
Perimeter Light Beam System 17
Perimeter Light Beam Dimensions 18
Selecting a Perimeter Light Beam 19
Laser Alignment Tool 19
LASER SCANNERS **20-21**
Laser Scanner Kits 20
Mounting Kits 21
Floor Stand 21
ACCESSORIES **22-24**
Light Tower Components 22
Tower Light Bracket 23
Tower Light Assembly Control Box 23
No-Go Indicator Light 24
Test Rods for Light Curtains 24
Optional Mounting Brackets for Point-Of-Operation Light .....
Curtain Systems 24
SWING-AWAY BRACKETS **25-28**
Swing-Away Mounting Brackets 25
Swing-Away Mounting Brackets Specs 26
Measurement Form for Swing-Away Brackets 27-28
STATIONARY BRACKETS **29-30**
Floor Stand 30
MIRRORS AND MIRROR BRACKETS **31-32**
TWO-HAND CONTROL **33-35**
Two-Hand Control 33
All-In-One Two-Hand Control 34
Selecting an All-In-One Two-Hand Control 35
TWO-HAND TRIP **36-37**
GATE (MOVABLE BARRIER) DEVICES **38-44**
Type A Gate 38
Type B Gate 38-39
Gate Assemblies 40
Gate Assembly Measurement Forms 41-44
PRESSURE-SENSITIVE SAFETY MATS **45-49**
Pressure-Sensitive Safety Mats 45-46
Standard Mats 47
Mat Edging and Connectors 48
Mat Controls 48-49
DETECT-A-FINGER® GEN II DROP-PROBE DEVICES **50-59**
RKC008 and RCK009 Series 50-52
RKC500 Series 53-54
DAF100 Series 55-56
Unitrol Soft Touch 57-59
REFERENCES **60-66**
Function-Testing Checklist for Light Curtains 60-61
Function-Testing Checklist for Two-Hand Control 62
Function-Testing Checklist for Two-Hand Trip 63
OSHA and ANSI Guard-Opening Requirements 64
OSHA and ANSI Guard-Opening Scales 65
Safety Distance Guide 65
Safeguarding Seminars 66

The applications described in this catalog are for instructional and informational purposes only; the photos in this catalog are for illustrative purposes only. They may not represent actual usage. This catalog has been carefully checked for accuracy and is thought to be fully consistent with the products described herein. However, Rockford Systems, LLC does not assume liability for the contents of this publication or for the use of any products described herein. Rockford Systems, LLC reserves the right to make changes to the products and documentation without further notice.

This document contains proprietary information protected by copyright. No part of this catalog may be reproduced, transmitted, stored in a retrieval system, or translated into any language, in any form or by any means without prior written permission from Rockford Systems, LLC, 5795 Logistics Parkway, Rockford, Illinois 61109. Rockford Systems reserves the right to make changes or revisions to the material contained in this catalog and cannot be held liable for incidental or consequential damages resulting from the furnishing, performance or use of this material.

Copyright © 2022 by Rockford Systems, LLC. All rights reserved. Not to be reproduced in whole or in part without written permission. LITHO IN U.S.A.

PRESENCE-SENSING DEVICES

Stop-Time Measurement Device
(pp.5-6)

PRESENCE-SENSING DEVICES QUICK REFERENCE GUIDE SAFETY CATEGORY FOR 4 PRODUCTS

	EZ-SCREEN LIGHT CURTAIN pp. 12-19	PERIMETER LIGHT BEAM pp. 20-23	SINGLE BEAM SYSTEM pp. 24-28	CONTACT THE FACTORY
Point of Operation	X			
Perimeter	X	X	X	
Entry/Exit				X
Palletizing				X
Cables	Up to 100' (30.4 m)	Up to 100' (30.4 m)	Up to 100' (30.4 m)	
Max Field of Coverage	72.0" (1800 mm)	20" (500 mm)		
Fixed Blanking	X			
Remote Fixed Blanking	X			
Float Blanking/Reduced Resolution	X			
Cascade Capability	X			
Max Field of Coverage	.55" (14 mm) or 1.18" (30 mm)		1 Beam	
Max Range	Up to 50' (15 m)	Up to 230' (70 m)	Up to 230' (70 m)	

AREA SCANNING DEVICES QUICK REFERENCE GUIDE SAFETY CATEGORY 3 PRODUCTS

	S3000 STANDARD pp. 26-29	S3000 ADVANCED pp. 26-29	S3000 PROFESSIONAL pp. 26-29
Nexus	X	X	X
Stationary	X	X	X
Protective Field – Max Range	23' (7 m)	23' (7m)	23' (7m)
Warning Field – Max Range	160' (49 m)	160' (49 m)	160' (49 m)
Number of Zones	1	4	8
Scanning Angle	190°	190°	190°

Quick Reference Guide
(p.7)

Point-Of-Operation Light Curtain System
(pp.8-16)

Perimeter Light Beam System
(pp.17-19)

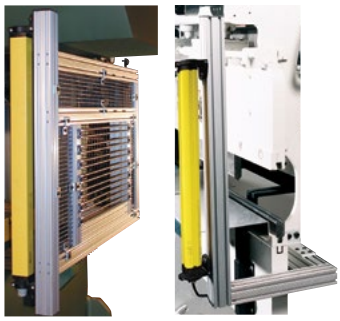

Swing-Away and Stationary Brackets
(pp.25-30)

Floor Stands, Mirrors, and Mirror Brackets
(pp.30-31)

PRESENCE-SENSING DEVICES

INTRODUCTION

Presence-sensing devices are available as infrared point-of-operation light curtains, infrared perimeter multiple light beam devices, infrared single-beam devices, or safety laser scanners. Light curtains used for point-of-operation safeguarding have close channel spacing to protect fingers and hands. Perimeter light curtains have wider channel spacing to detect larger parts of the body. Perimeter, multi-beam, and single-beam devices are designed specifically for perimeter safeguarding. Safety laser scanners are designed for area, access, and point-of-operation safeguarding.

There are many safety requirements that must be met before light curtains can be installed as point-of-operation safeguards. These requirements are located in OSHA 29 CFR 1910.217 and the ANSI B11-series safety standards for machine-tool safety. We have printed the following paragraphs for your convenience.

(c)(3)(i) Point-of-operation devices shall protect the operator by:

(a) Preventing and/or stopping normal stroking of the press if the operator's hands are inadvertently placed in the point of operation;

(c)(3)(iii) A presence sensing point-of-operation device shall protect the operator as provided in paragraph (c)(3)(i)(a) of this section, and shall be interlocked into the control circuit to prevent or stop slide motion if the operator's hand or other part of his body is within the sensing field of the device during the downstroke of the press slide.

(a) The devices may not be used on machines using full revolution clutches.

(b) The devices may not be used as a tripping means to initiate slide motion, except when used in total conformance with paragraph (h) of this section. (See OSHA safety standards for details.)

(c) The device shall be constructed so that a failure within the system does not prevent the normal stopping action from being applied to the press when required, but does prevent the initiation of a successive stroke until the failure is corrected. The failure shall be indicated by the system.

(d) Muting (bypassing of the protective function) of such device during the upstroke of the press slide is permitted for the purpose of parts ejection, circuit checking, and feeding.

(e) The safety distance (Ds) from the sensing field to the point of operation shall be greater than the distance determined by the following formula:

Ds = 63 inches/second x Ts where:

Ds = minimum safety distance (inches);

63 inches/second = hand speed constant; and

Ts = stopping time of the press measured at approximately 90° position of crankshaft rotation (seconds).

(f) Guards shall be used to protect all areas of entry to the point of operation not protected by the presence-sensing device.

MINIMUM SAFETY DISTANCE

The minimum safety distance, which is one of the considerations listed, is defined in ANSI as the minimum distance from the light curtain's plane of light to the closest hazard or danger point where the operator could reach into the hazard.

This minimum safety distance is based on the stopping ability of the machine and a hand speed constant. When the minimum safety distance is calculated, several other factors must be taken into account which are not included in the OSHA formula. These factors include the total system response time including the light curtain, the minimum object sensitivity of the presence-sensing device, and the additional time for brake monitoring. The total system response time includes the stopping time of the machine under worse case conditions, response time of the control system, response time of the presence-sensing device as stated by the manufacturer, the response time of the interface, and, if applicable, additional time allowed for the brake monitor to compensate for variations in normal stopping time.

The depth penetration factor (Dpf), which is based on the light curtain's MOS (minimum object sensitivity), is part of the formula.

The following formula is used to compute the minimum safety distance (Ds) on mechanical power presses to meet the ANSI (American National Standards Institute) B11.1 standard for press safety:

D_s = K (Ts + Tc + Tr + Tspm) + Dpf where:

K = 63 inches/second (hand speed constant)

T_s = Stop time of equipment measured at the final control element

T_c = Response time of the control system

T_r = Response time of the presence-sensing device and its interface

T_{spm} = Additional time allowed for the stopping performance monitor to compensate for variations in normal stopping time

D_{pf} = The added distance due to the depth penetration factor.

Note: If the channel blanking feature is used on light curtains, additional safety distance must be enforced based on the number of channels blanked.

The following is a list of safeguarding devices that could be applied using the above safety distance formula. For more details, see ANSI B11.1-2009.

1. Interlocked barrier guards
2. Two-hand control devices
3. Two-hand trip devices
4. Single control safeguarding devices
5. Electro-optical presence-sensing devices
6. RF (radio-frequency) presence-sensing devices
7. Safety mat devices
8. Safety edge device

PORTABLE STOP-TIME MEASUREMENT (STM) DEVICE

The stop-time measurement (STM) device measures the time it takes a machine to stop after a signal is given. It is mainly used on reciprocating (stroking or cycling) machines, such as mechanical or hydraulic presses and press brakes. With optional accessories, it can also be used on machines that rotate, such as lathes, mills, and drills.

Industry uses this type of device to determine the stopping time of a machine before installing safeguarding devices such as a two-hand control or a presence-sensing device. The stopping time measured by the STM device during the hazardous portion of the cycle is used in the OSHA (Occupational Safety and Health Administration) or ANSI (American National Standards Institute) formulas to calculate the safety distance. The safety distance is then used to establish the location of the safeguarding device in relation to the nearest hazard. This device can also be used to periodically check the machine's stopping time to ensure that the current safety distance corresponds to the current condition of the machine's stopping ability.

FEATURES

- Easy to use in the field
- Portable; battery-operated
- Readout in stopping time and safety distance
- Handy carrying case
- Easy programming
- Machine memory
- Preprogrammed light cutain response time and minimum object sensitivity
- Choice of hand-speed constant

SPECIFICATIONS:

Electronics

Display

Description	4 digit, 14 segment, ¼" red LED
Stop Time	0-9999 milliseconds
Safety Distance	0-999.9 inches
Automatic Decimal	Yes
Lead Zero Blanking	Yes
Accuracy	±1%
Power Source	115VACor internal battery
Battery Type	6 V, sealed lead acid
Operating Time	10 hours (full charge)
Recharge Time	8 hours
Battery Charger	Contained

Mechanical

Meter

Material	Aluminum with baked enamel finish
Dimensions	11" L x 7" D x 7" H
Weight	9 lb

Hand-Held Actuator

Material	Aluminum with baked enamel finish
Dimensions	4½" dia. x 2" H
Weight	3 lb

Position/Velocity Transducer

Material	Aluminum with baked enamel finish
Dimensions	5¼" L x 2¾" D x 4¾" H
Weight	1.6 lb
Cable stroke	49"

PORTABLE STOP-TIME MEASUREMENT (STM) DEVICE

When using this STM device, the display gives both the stopping time of the machine in milliseconds (thousandths of a second), and the calculated safety distance in inches. The safety distance is based on the hand speed constant of 63 inches (1.6 meters) per second. For mechanical power presses, the OSHA formula multiplies the hand speed constant by the stopping time of the machine at 90° of crankshaft rotation. When using this formula, the reaction time of either ergonomic (capacitive) palm buttons or a presence-sensing device should be added to the stopping time to calculate the proper safety distance. Please refer to the formula found in the ANSI B11.1 standard for mechanical power presses.

This STM device is also used by federal and state OSHA compliance officers, insurance company loss-control engineers, and safety training personnel to determine if proper safety distances are being used for the existing safeguarding method.

The portable design makes the STM very easy to use. A programmed stop signal is provided, which releases or actuates a button or other operator-controlled device on the machine during the hazardous portion of the cycle. If a machine has a presence-sensing device, the plane of light can be interrupted with the furnished flag, which sends a signal to stop the machine.

This device consists of three major components:

1. The meter which is the processor containing the electronics and display.
2. The position/velocity transducer which detects motion and provides the programmed output signal to stop the machine.
3. The hand-held actuator which automatically releases or pushes a button or other device on the machine. It is also used to operate the flag when presence-sensing devices are used as the safeguarding method.

Other STM components provided with this device are the presence-sensing flag, cable extension set, legs, plunger extension, and instruction manual.

ORDERING INFORMATION

Part No. DCL100—Complete STM in a carrying case including meter, transducer, cable extension set, hand-held actuator, presence-sensing flag, legs, plunger extension, and instruction manual.

Optional Accessories

Part No. DCL101—Remote tachometer assembly
(for reciprocating machines that stop beyond bottom or top, and for machines with relatively slow rotating or lineage motion)
Note: Requires DCL102 (see below)

Part No. DCL102—One NO manual start switch

FIELD OF COVERATE IN INCHES (mm)	A INCHES (mm)	B INCHES (mm)	C INCHES (mm)	D INCHES (mm)
12 (300)	11.8 (300)	14.6 (372)	16.0 (405)	13.7 (347)
18 (450)	17.7 (450)	20.6 (522)	21.9 (555)	19.6 (497)
24 (600)	23.6 (600)	26.4 (671)	27.7 (704)	25.4 (646)
30 (750)	29.5 (750)	32.3 (821)	33.6 (854)	31.3 (796)
35 (900)	35.4 (900)	38.2 (971)	39.5 (1004)	37.2 (946)
41 (1050)	41.3 (1050)	44.1 (1120)	45.4 (1153)	43.1 (1095)
47 (1200)	47.2 (1200)	50.0 (1270)	51.3 (1303)	49.0 (1245)
53 (1350)	53.1 (1350)	55.9 (1420)	57.2 (1453)	54.9 (1395)
59 (1500)	59.1 (1500)	61.8 (1569)	63.1 (1602)	60.8 (1544)
65 (1650)	65.0 (1650)	67.7 (1719)	69.0 (1752)	66.7 (1694)
71 (1800)	70.9 (1800)	73.6 (1869)	74.9 (1902)	72.6 (1844)

SELECTION GUIDE FOR POINT-OF-OPERATION AND PERIMETER (WORK-ENVELOPE) SAFEGUARDING

This chart has been put together to make selecting the proper safeguarding system for your application easy. Begin by determining the type of application that requires safeguarding. Choose the point-of-operation system, perimeter system, or area scanning device that fits your application. If at any time you have questions, please call us at 1-800-922-7533.

PRESENCE-SENSING DEVICES QUICK REFUERENCE GUIDE SAFETY CATEGORY FOR 4 PRODUCTS			
	EZ-SCREEN LIGHT CURTAIN pp. 8-13	**PERIMETER LIGHT BEAM pp. 15-17**	**CONTACT THE FACTORY**
Point of Operation	X		
Perimeter	X	X	
Entry/Exit			X
Palletizing			X
Cables	Up to 100' (30.4 m)	Up to 100' (30.4 m)	
Max Field of Coverage	70.9" (1800 mm)	35" (900 mm)	
Fixed Blanking	X		
Remote Fixed Blanking	X		
Float Blanking/Reducted Resolution	X		
Cascade Capability	X		
Max Field of Coverage	.55" (14 mm) or 1.18" (30 mm)		
Max Rage	Up to 59' (18 m)	Up to 230' (70 m)	

AREA SCANNING DEVICES QUICK REFERNCE GUIDE SAFETY CATEGORY 3 PRODUCTS			
	S3000 STANDARD pp. 21	**S3000 ADVANCED pp. 21**	**S3000 PROFESSIONAL pp. 21**
Area	X	X	X
Stationary	X	X	X
Protective Field – Max Range	23' (7 m)	23' (7m)	23' (7m)
Warning Field – Max Range	160' (49 m)	160' (49 m)	160' (49 m)
Number of Zones	1	4	8
Scanning Angle	190°	190°	190°

PROTECTOR™ SERIES LIGHT CURTAIN SYSTEMS

LIGHT CURTAIN SYSTEM FEATURES

NEW Protector™ Series Light Curtains safeguarding personnel near industrial machinery with the potential to cause injury. Protector Series Light Curtains feature bi-color alignment indicators, simplified resolution settings, automatic diagnostics, remote fixed blanking, and can be interconnected in a cascading configuration. Built for ease-of-use, they also provide for hassle-free installations that eliminate software, DIP switches, and expensive components from the process. Brackets and connecting cables are all included, as a kitted solution, for faster, more cost-effective light curtain installations. For those that do not need the full kit, individual emitters and receivers are also sold separately.

FASTER SET-UP, EASIER MAINTENANCE

Designed to reduce setup and maintenance time, Protector Series Light Curtains feature bright bi-color alignment indicators that run the length of the receiver window. In the event a sensor is not aligned properly or if the window requires cleaning, green lights will switch to red to instantly identify the problem area. Optional remote indicators can be purchased for long distance monitoring of light curtain status to further support safety and productivity goals.

DUAL-SCAN TECHNOLOGY

Protector Series Light Curtains employ dual-scan technology that makes its photodiodes highly immune to EMI, RFI, ambient light, weld flash and strobe lights that may compromise sensor performance. Damage from impact is greatly reduced by a design that recesses the unit's windows 5mm into the housing to prevent direct contact with the sensors. Emitters and receivers are both contained inside of 3mm thick industrial grade aluminum housings with durable metal end-caps.

Emitter, receiver and optional mirror shown

CASCADING CAPABILITY

For those applications that require multi-sided protection where mirrors cannot be used, up to four Protector Series Light Curtain systems of any length, resolution, and beam number can be easily configured. Cascading Protector Series Light Curtains minimize wiring, while simplifying the safety circuit, resulting in lower Total Cost of Ownership.

CLEAN ROOM COMPATIBLE

Protector Series Light Curtains are also ideal for industries subject to frequent washdowns or water spray, such as food, beverage and pharmaceutical processing. They are rated IP65/IP67 so they offer total protection from low-pressure water jets and more substantial liquid ingress or immersion.

SIMPLIFIED ORDERING

Protector Series Light Curtain designs will accommodate more than 90% of all point-of-operation applications, coming in a choice of three common resolutions — 14mm (finger detection), 23mm (hand detection) and 40mm (body detection) — for each light curtain length. All three resolutions have a range of up to 12 meters (39 feet) coinciding with the needs of most manufacturing settings.

PROTECTOR™ SERIES LIGHT CURTAIN SYSTEMS

Light Curtain Kits include: light, light curtain, mounting brackets and 2 cables

Kits	Mirrors *Sold Individually
SLLCP14-490P88-0312	RLCM21Z7 *MIRROR RLC 21.7"*
SLLCP14-700P88-0313	RLCM32Z5 *MIRROR RLC 32.5"*
SLLCP14-910P88-0314	RLCM38Z4 *MIRROR RLC 38.4"*
SLLCP23-350P88-0301	RLCM18Z7 *MIRROR RLC 18.7"*
SLLCP23-490P88-0302	RLCM21Z7 *MIRROR RLC 21.7"*
SLLCP23-630P88-0303	RLCM26Z6 *MIRROR RLC 26.6"*
SLLCP23-770P88-0304	RLCM32Z5 *MIRROR RLC 32.5"*
SLLCP23-910P88-0305	RLCM38Z4 *MIRROR RLC 38.4"*
SLLCP23-1120P88-0306	RLCM46Z3 *MIRROR RLC 46.3"*
SLLCP23-1260P88-0307	RLCM55Z1 *MIRROR RLC 55.1"*
SLLCP23-1400P88-0308	RLCM58Z1 Mirror RLC 58.1"
SLLCP23-1540P88-0309	RLCM65Z9 *MIRROR RLC 65.9"*
SLLCP23-1680P88-0310	RLCM68Z9 *MIRROR RLC 68.9"*
SLLCP40-1820P88-0311	RLCM74Z8 *MIRROR RLC 74.8"*

Replacement Emitters & Receivers; NOT SOLD AS KITS

Replacements

19.3" Coverage Height:
SLLCE14-490-S-0112 SLLCR14-490-S-0212
» Resolution: 14 mm

27.5" Coverage Height:
SLLCE14-700-S-0113 SLLCR14-700-S-0213
» Resolution: 14 mm

35.8" Coverage Height:
SLLCE14-910-S-0114 SLLCR14-910-S-0214
» Resolution: 14 mm

13.8" Coverage Height:
SLLCE23-350-S-0101 SLLCR23-350-S-0201
» Resolution: 23 mm

19.3" Coverage Height:
SLLCE23-490-S-0102 SLLCR23-490-S-0202
» Resolution: 23 mm

24.8" Coverage Height:
SLLCE23-630-S-0103 SLLCR23-630-S-0203
» Resolution: 23 mm

30.3" Coverage Height:
SLLCE23-770-S-0104 SLLCR23-770-S-0204
» Resolution: 23 mm

35.8" Coverage Height:
SLLCE23-910-S-0105 SLLCR23-910-S-0205
» Resolution: 23 mm

44.1" Coverage Height:
SLLCE23-1120-S-0106 SLLCR23-1120-S-0206
» Resolution: 23 mm

49.6" Coverage Height:
SLLCE23-1260-S-0107 SLLCR23-1260-S-0207
» Resolution: 23 mm

55.1" Coverage Height:
SLLCE23-1400-S-0108 SLLCR23-1400-S-0208
» Resolution: 23 mm

60.6" Coverage Height:
SLLCE23-1540-S-0109 SLLCR23-1540-S-0209
» Resolution: 23 mm

66.1" Coverage Height:
SLLCE23-1680-S-0110 SLLCR23-1680-S-0210
» Resolution: 23 mm

71.7" Coverage Height:
SLLCE40-1820-S-0111 SLLCR40-1820-S-0211
» Resolution: 40 mm

POINT-OF-OPERATION LIGHT CURTAIN SYSTEMS

EZ-SCREEN LIGHT CURTAIN SYSTEM FEATURES

- Meets industry OSHA, ANSI, UL, IEC, and EN safety standards 14 and 30 mm resolutions
- Field of coverage from 11.8” to 70.9” (300 mm to 1800 mm)
- Scanning range up to 59’ (18 m)
- 2 solid-state OSSD (output signal switching device) outputs—24-V PNP outputs
- Quick response times
- Strobe-light and weld-flash immunity
- Compact light bar housing—1.78” x 1.42” (45.2 x 36.0 mm)
- Transmitter and receiver cable lengths from 15’ to 100’ (4.5 to 30 m)
- 7-segment alignment and diagnostics display
- Two-piece design with external device monitoring (EDM)
- Cascading—up to 4 pairs and of different lengths

This photoelectric presence-sensing system (light curtain) is designed to meet safety standards for protecting operating personnel from point-of-operation machine hazards. The EZ-Screen system operates as a stand-alone system to be interfaced into an existing machine control, or a generic interface control is available (see page 14).

The EZ-Screen system consists of a transmitter and receiver. The transmitter consists of a series of LEDs (light-emitting diodes) which transmit modulated infrared light to the receiver unit. The receiver consists of a corresponding array of photo-diodes that are automatically synchronized with the transmitter LEDs. The EZ-Screen system can be mounted vertically, horizontally, or on any angle depending on the application. The only requirement is that the transmitter must align with the receiver when these units are installed. This system is also cascadable up to four systems. The cascadable pairs can be any length, any number of beams, or have different resolutions as long as each transmitter matches its own receiver.

The EZ-Screen presence-sensing system provides a protective, durable plane of light formed by the aligned transmitter and receiver cells. Any interruption of this plane of light by an object equal to or larger than the MOS (minimum object sensitivity) initiates an output signal to the machine control system. This output causes the machine to stop or does not allow a cycle until the blockage is removed.

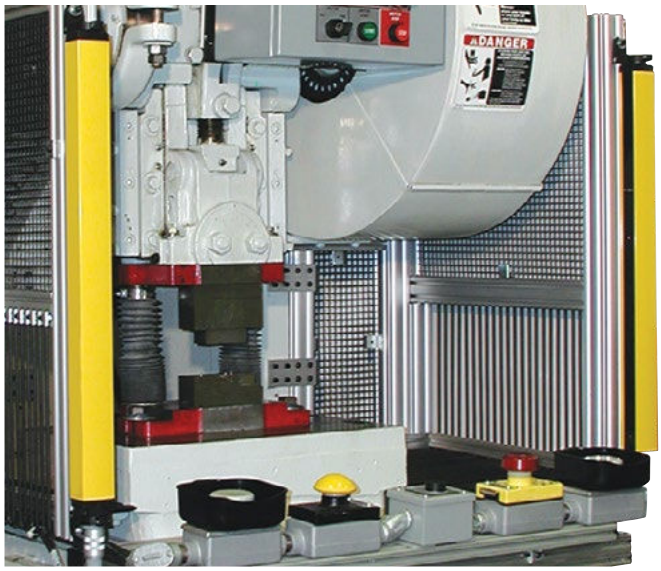

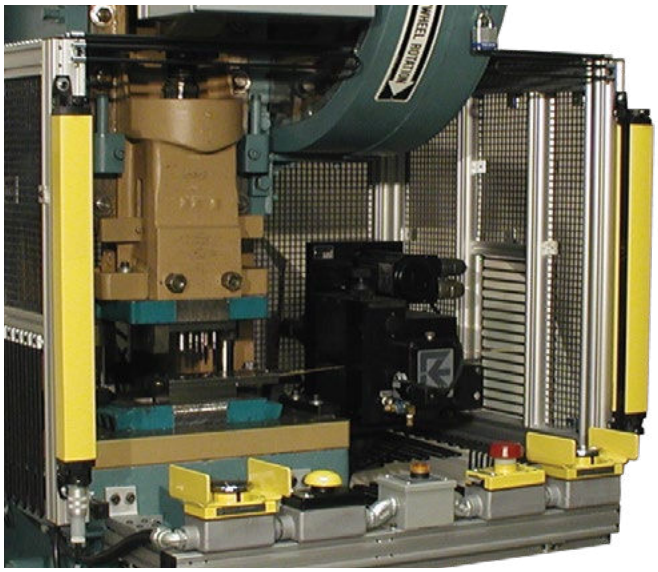

EZ-SCREEN LIGHT CURTAIN SYSTEM FEATURES (CONTINUED)

The EZ-Screen system is designed in a way that if a component should fail, a total system shutdown results. This is achieved through redundant self-checking circuitry, which compares the actual system operation with that of a redundant setup. Upon detection of any deviation from the expected status, a shutdown condition occurs.

The plane-of-light portion of the system is formed by a series of high-quality individual optical lenses on every transmitter and receiver channel. This assures the optimal signal-to-noise ratio and allows operation in harsh, oily, and dirty environments. Individual channel lenses create a column of light between each of the active transmitter and receiver channels. The creation of a column of light between transmitter and receiver is called light collimation. Light collimation is necessary to ensure that the infrared light moves from the transmitter to the receiver in a controlled beam that maximizes its efficiency. Additionally, the lens on each receiver channel minimizes the possibility of the infrared light bouncing off shiny objects and fooling the receiver.

The light bars are equipped with status indicators—LEDs and a 7-segment display. These status indicators are helpful when aligning the light curtain and when determining the cause of an interruption in the EZ-Screen system. The LEDs illuminate and the display indicates alphanumeric error messages when a channel is interrupted, out of alignment, configured incorrectly, etc.

The EZ-Screen light curtain system modulates each of its LED light sources in a specially coded manner. This modulation virtually eliminates ambient light interference. The light curtain electronically sequences its individual LED transmitters and photo-transistor receivers at a fast rate that prevents any light interference between individual transmitter/receiver sections. This also provides maximum stability and ease of alignment.

STATUS INDICATOR LIGHTS

A variety of status indicator lights are clearly visible on the front panel of each transmitter and receiver. Red, green, and yellow lights display the operating status, configuration error codes, and blocked beams. A diagnostic display indicates alphanumeric error messages when a channel is interrupted, out of alignment, configured incorrectly, blocked, etc.

EZ-Screen Light Curtain System

Transmitter *Receiver*

Transmitter

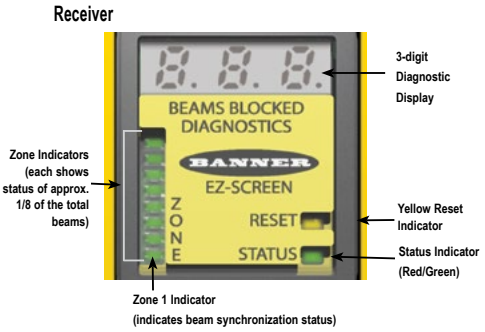

Receiver

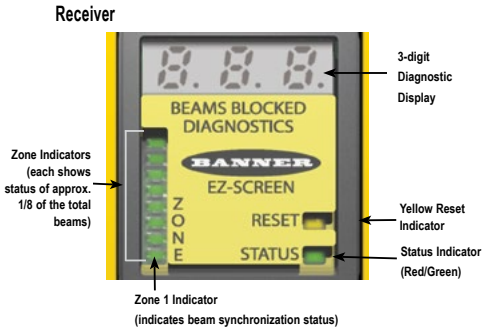

DIMENSIONS FOR THE EZ-SCREEN LIGHT CURTAIN SYSTEM

FIELD OF COVERATE IN INCHES (mm)	A INCHES (mm)	B INCHES (mm)	C INCHES (mm)	D INCHES (mm)
12 (300)	11.8 (300)	14.6 (372)	16.0 (405)	13.7 (347)
18 (450)	17.7 (450)	20.6 (522)	21.9 (555)	19.6 (497)
24 (600)	23.6 (600)	26.4 (671)	27.7 (704)	25.4 (646)
30 (750)	29.5 (750)	32.3 (821)	33.6 (854)	31.3 (796)
35 (900)	35.4 (900)	38.2 (971)	39.5 (1004)	37.2 (946)
41 (1050)	41.3 (1050)	44.1 (1120)	45.4 (1153)	43.1 (1095)
47 (1200)	47.2 (1200)	50.0 (1270)	51.3 (1303)	49.0 (1245)
53 (1350)	53.1 (1350)	55.9 (1420)	57.2 (1453)	54.9 (1395)
59 (1500)	59.1 (1500)	61.8 (1569)	63.1 (1602)	60.8 (1544)
65 (1650)	65.0 (1650)	67.7 (1719)	69.0 (1752)	66.7 (1694)
71 (1800)	70.9 (1800)	73.6 (1869)	74.9 (1902)	72.6 (1844)

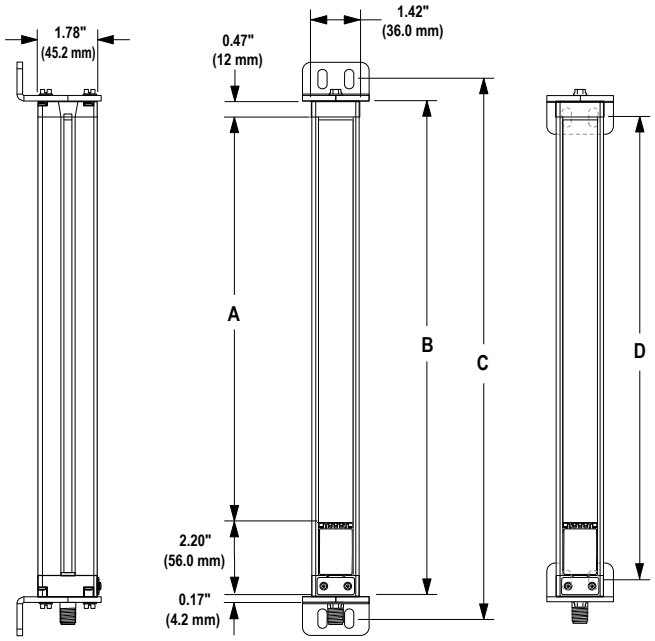

EZ-SCREEN RESPONSE TIMES

The response time of these light curtains varies depending on their size (see the chart below). The response time is the length of time that elapses between the interruption of the light beam and the output signal. Response time includes the reaction time of the output device(s) (i.e., relays), and is specified in milliseconds.

These light curtains are designed to meet UL and CSA standards and also have full PSDI (presence-sensing-device initiation) capability. This means that the light curtain can be used to start the cycle of the machine while at the same time it can be safeguarding the machine. For further information on PSDI, please see OSHA 29 CFR 1910.217 (h) and ANSI B11.1, B11.2, B11.3, and B11.19.

Transmitter/Receiver With .55" (14 mm) Minimum Object Sensitivity (Resolution)

FIELD OF COVERATE INCHES (mm)	NUMBER OF BEAMS	RESPONSE TIME
12 (300)	40	15 ms
18 (450)	60	19 ms
24 (600)	80	23 ms
30 (750)	100	27 ms
35 (900)	120	32 ms
41 (1050)	140	36 ms
47 (1200)	160	40 ms
53 (1350)	180	43 ms
59 (1500)	200	48 ms
65 (1650)	220	52 ms
71 (1800)	240	56 ms

Transmitter/Receiver With 1.18" (30 mm) Minimum Object Sensitivity (Resolution)

FIELD OF COVERATE INCHES (mm)	NUMBER OF BEAMS	RESPONSE TIME
12 (300)	20	11 ms
18 (450)	30	13 ms
24 (600)	40	15 ms
30 (750)	50	17 ms
35 (900)	60	19 ms
41 (1050)	70	21 ms
47 (1200)	80	23 ms
53 (1350)	90	25 ms
59 (1500)	100	27 ms
65 (1650)	110	30 ms
71 (1800)	120	32 ms

SELECTING A NONCASCADING EZ-SCREEN LIGHT CURTAIN

To determine the 9-digit configured part number for a noncascading light curtain required, follow the directions and use the information in the **PART NUMBERING SYSTEM CHART** below.

1. The first 3 digits for all EZ-Screen light curtain pairs are LCB.
2. The 4th digit determines the MOS (minimum object sensitivity) and OPR (operating range).
3. The 5th and 6th digits determine the field of coverage.
4. The 7th digit determines the selection of remote keyed fixed blanking.
5. The 8th digit indicates the length of the transmitter cable.
6. The 9th digit indicates the length of the receiver cable (can be a different length from the transmitter cable).

SAMPLE

1	2	3	4	5	6
L C B	3	2 4	1	5	7

The sample shown, Part No. LCB-3-24-1-5-7, is an EZ-Screen light curtain pair with 1.18” (30 mm) minimum object sensitivity, 1-59’ (18 m) operating range, 23.6” (600 mm) field of coverage, remote fixed blanking, a 50’ transmitter cable, and a 75’ receiver cable.

NONCASCADING LIGHT CURTAIN PRESENCE-SENSING DEVICE SYSTEM

LCB - X - X X - X - X - X

MOS (MINIMUM OBJECT SENSITIVITY) AND OPR (OPERATING RANGE)

	MOS	OPR
1	— 0.55” (14 mm)	19.68’ (6 m)
3	— 1.18” (30 mm)	59’ (18 m)

FIELD OF COVERAGE

12	— 11.8” (300 mm)
18	— 17.7” (450 mm)
24	— 23.6” (600 mm)
30	— 29.5” (750 mm)
35	— 35.4” (900 mm)
41	— 41.3” (1050 mm)
47	— 47.2” (1200 mm)
53	— 53.1” (1350 mm)
59	— 59” (1500 mm)
65	— 65” (1650 mm)
71	— 70.9” (1800 mm)

REMOTE FIXED BLANKING SWITCH

1	— Yes–includes 1’ (.31 m) connection cable
2	— No

RECEIVER CABLE W/PLUG

0	— No cable
1	— 15’ (4.5 m)
2	— 25’ (7.6 m)
5	— 50’ (15.2 m)
7	— 75’ (22.8 m)
9	— 100’ (30.4 m)

TRANSMITTER CABLE W/PLUG

0	— No cable
1	— 15’ (4.5 m)
2	— 25’ (7.6 m)
5	— 50’ (15.2 m)
7	— 75’ (22.8 m)
9	— 100’ (30.4 m)

Four (4) end mount swivel brackets are included with each light bar pair for mounting.

Two (2) additional center mounting brackets are included with each light bar pair with a field of coverage of 47 and up.

REMOTE FIXED BLANKING SWITCH

A remote fixed blanking switch is provided when the remote fixed blanking switch option is chosen in the part numbering chart above. This remote blanking switch is used in place of the DIP switches on the receiver when frequent configuration of fixed blanking is needed. A 1’ connection cable, two (2) mounting brackets, and two (2) keys are supplied with each remote switch.

SELECTING THE FIRST PAIR IN A CASCADING EZ-SCREEN LIGHT CURTAIN SYSTEM

To determine the 9-digit configured part number for the first pair in a cascading light curtain system, follow the directions and use the information in the **PART NUMBERING SYSTEM CHART** below.

1. The first 4 digits for the first pair in a cascading light curtain system are LCBC.
2. The 5th digit determines the MOS (minimum object sensitivity) and OPR (operating range).
3. The 6th and 7th digits determine the field of coverage.
4. The 8th digit determines the length of the transmitter cable. NOTE: This is required for the first pair of cascading light bar pairs only.
5. The 9th digit determines the length of the receiver cable (can be a different length from the transmitter cable). NOTE: This is required for the first pair of cascading light bar pairs only.

SAMPLE—FIRST IN CASCADE SYSTEM

1 2 3 4 5

L C B C - 3 - 1 8 - 1 - 2

The sample shown, Part No. LCBC-3-18-1-2, is the first pair in the cascading system. It has 1.18” (30 mm) minimum object sensitivity, 1-59’ (18 m) operating range, 17.7” (450 mm) field of coverage, a 15’ transmitter cable, and a 25’ receiver cable.

CASCADING LIGHT CURTAIN PRESENCE-SENSING DEVICE SYSTEM

LCBC - X - X X - X - X

MOS (MINIMUM OBJECT SENSITIVITY) AND OPR (OPERATING RANGE)

	MOS	OPR
1	— 0.55” (14 mm)	19.68’ (6 m)
3	— 1.18” (30 mm)	59’ (18 m)

LENGTH OF BARS

12	— 11.8” (300 mm)
18	— 17.7” (450 mm)
24	— 23.6” (600 mm)
30	— 29.5” (750 mm)
35	— 35.4” (900 mm)
41	— 41.3” (1050 mm)
47	— 47.2” (1200 mm)
53	— 53.1” (1350 mm)
59	— 59” (1500 mm)
65	— 65” (1650 mm)
71	— 70.9” (1800 mm)

RECEIVER CABLE W/PLUG (REQUIRED FOR FIRST IN CASCADE ONLY)

0	— No cable
1	— 15’ (4.5 m)
2	— 25’ (7.6 m)
5	— 50’ (15.2 m)
7	— 75’ (22.8 m)
9	— 100’ (30.4 m)

TRANSMITTER CABLE W/PLUG (REQUIRED FOR FIRST IN CASCADE ONLY)

0	— No cable
1	— 15’ (4.5 m)
2	— 25’ (7.6 m)
5	— 50’ (15.2 m)
7	— 75’ (22.8 m)
9	— 100’ (30.4 m)

Four (4) end mount swivel brackets are included with each light bar pair for mounting.

Two (2) additional center mounting brackets are included with each light bar pair with a field of coverage of 47 and up.

NOTE: Use the chart on the next page to configure an additional part number for each of the 2nd, 3rd, and/or 4th pair in the cascading system. A maximum of four (4) light bar pairs may be cascaded, and they can be of different lengths.

SELECTING THE 2ND, 3RD, AND/OR 4TH PAIR IN A CASCADING EZ-SCREEN LIGHT CURTAIN SYSTEM

To determine the 9-digit configured part number for the 2nd, 3rd, and/or 4th pair in a cascading light curtain system, follow the directions and use the information in the **PART NUMBERING SYSTEM CHART** below.

1. The first 4 digits for the 2nd, 3rd, and/or 4th pair in a cascading light curtain system are LCBC.
2. The 5th digit determines the MOS (minimum object sensitivity) and OPR (operating range).
3. The 6th and 7th digits determine the field of coverage.
4. The 8th digit determines the length of the connecting cables between the transmitters.
5. The 9th digit determines the length of the connecting cables between the receivers.

SAMPLE—SECOND IN CASCADE SYSTEM

1 2 3 4 5

L C B C - 3 - 2 4 - C - C

The sample shown, Part No. LCBC-3-24-C-C, is the second pair in the cascading system. It has 1.18" (30 mm) minimum object sensitivity, 1-59' (18 m) operating range, 23.6" (600 mm) field of coverage, and a 3' transmitter connecting cable with a 3' receiver connecting cable.

CASCADING LIGHT CURTAIN PRESENCE-SENSING DEVICE SYSTEM

LCBC - X - X X - X - X

MOS (MINIMUM OBJECT SENSITIVITY) AND OPR (OPERATING RANGE)

	MOS	OPR
1	— 0.55" (14 mm)	19.68' (6 m)
3	— 1.18" (30 mm)	59' (18 m)

LENGTH OF BARS

12	— 11.8" (300 mm)
18	— 17.7" (450 mm)
24	— 23.6" (600 mm)
30	— 29.5" (750 mm)
35	— 35.4" (900 mm)
41	— 41.3" (1050 mm)
47	— 47.2" (1200 mm)
53	— 53.1" (1350 mm)
59	— 59" (1500 mm)
65	— 65" (1650 mm)
71	— 70.9" (1800 mm)

CASCADE RECEIVER CABLE LENGTH

A	— 1' (.31 m)
B	— 3' (.91 m)
C	— 8' (2.43 m)

CASCADE TRANSMITTER CABLE LENGTH

A	— 1' (.31 m)
B	— 3' (.91 m)
C	— 8' (2.43 m)

Four (4) end mount swivel brackets are included with each light bar pair for mounting.

Two (2) additional center mounting brackets are included with each light bar pair with a field of coverage of 47 and up.

NOTE: Use the chart above to configure a part number for EACH additional cascading light bar pair for the 2nd, 3rd, and/or 4th pair in the cascading system. A maximum of four (4) light bar pairs may be cascaded, and they can be of different lengths.

REMOTE OPERATOR STATIONS

Remote operator stations are available that can be used in conjunction with an interface when a plain door enclosure or loose interface components are chosen. These remote operator stations are available with an off/on keyed selector switch, a light curtain reset button, or an off/on keyed selector switch and reset button. Each remote operator station is furnished in a steel enclosure.

ORDERING INFORMATION	
PART NO.	**DESCRIPTION**
LLD1236	Light Curtain off/on remote operator station
LLD1237	Light Curtain reset remote operator station
LLD1238	Light Curtain on/off with reset remote operator station

LLD1236

LLD1237

LLD1238

LASER ALIGNMENT TOOL—PART NO. LAT-1

A laser alignment tool is available to aid in the alignment of any point-of-operation light curtain system. It is particularly useful with applications involving mirrors.

The laser alignment tool includes a 9-volt battery, a mounting clip, and has a built-in circular bubble level. **This alignment tool is to be used for set up only.**

PERIMETER LIGHT BEAM SYSTEM

The perimeter light beam system is designed to meet safety standards for one-sided or multi-sided hazardous area and access protection. It can be used for safeguarding robotic work cells, automatic machinery work envelopes, assembly lines, and other manufacturing work cells.

FEATURES

- Meets industry OSHA, ANSI, UL, IEC, and EN safety standards
- Operating ranges: Short—2.6' to 65' (.8 to 20 m)
  Long—49' to 230' (15 to 70 m)
- Number of beams—2, 3, or 4
- Beam separation—12" to 23" (300 mm to 584 mm)
- 24 ms response time
- Strobe-light and weld-flash immunity
- Transmitter and receiver cable lengths up to 100' (30.5 m)
- Restart interlock
- External device monitoring (EDM)
- LED 7-segment alignment and diagnostics display

The perimeter light beam system consists of a transmitter and receiver. Each is encased in a rigid, aluminum die-cast housing which makes them very durable. Communication between the transmitter and receiver is accomplished optically; no external controller is required.

An invisible infrared beam of light is formed between the transmitter and receiver. Interruption of this beam of light sends a stop signal to the machine's control. This signal is designed to stop hazardous machine motion or prevent the initiation of machine motion.

Mirrors increase the coverage of the safeguarded area. Two sides of a hazardous area can be safeguarded with the use of one perimeter light beam system and one mirror. Three sides of a hazardous area can be safeguarded by using one perimeter light beam system and two mirrors. See pages 31-32 for information about mirrors.

The perimeter light beam system is delivered ready for operation. Configuration settings are accessible from the front of the beams and can be changed while the system remains mounted.

Perimeter Light Curtain System Used as Access Protection for an Automatic Machine Work Envelope

PERIMETER LIGHT BEAM DIMENSIONS

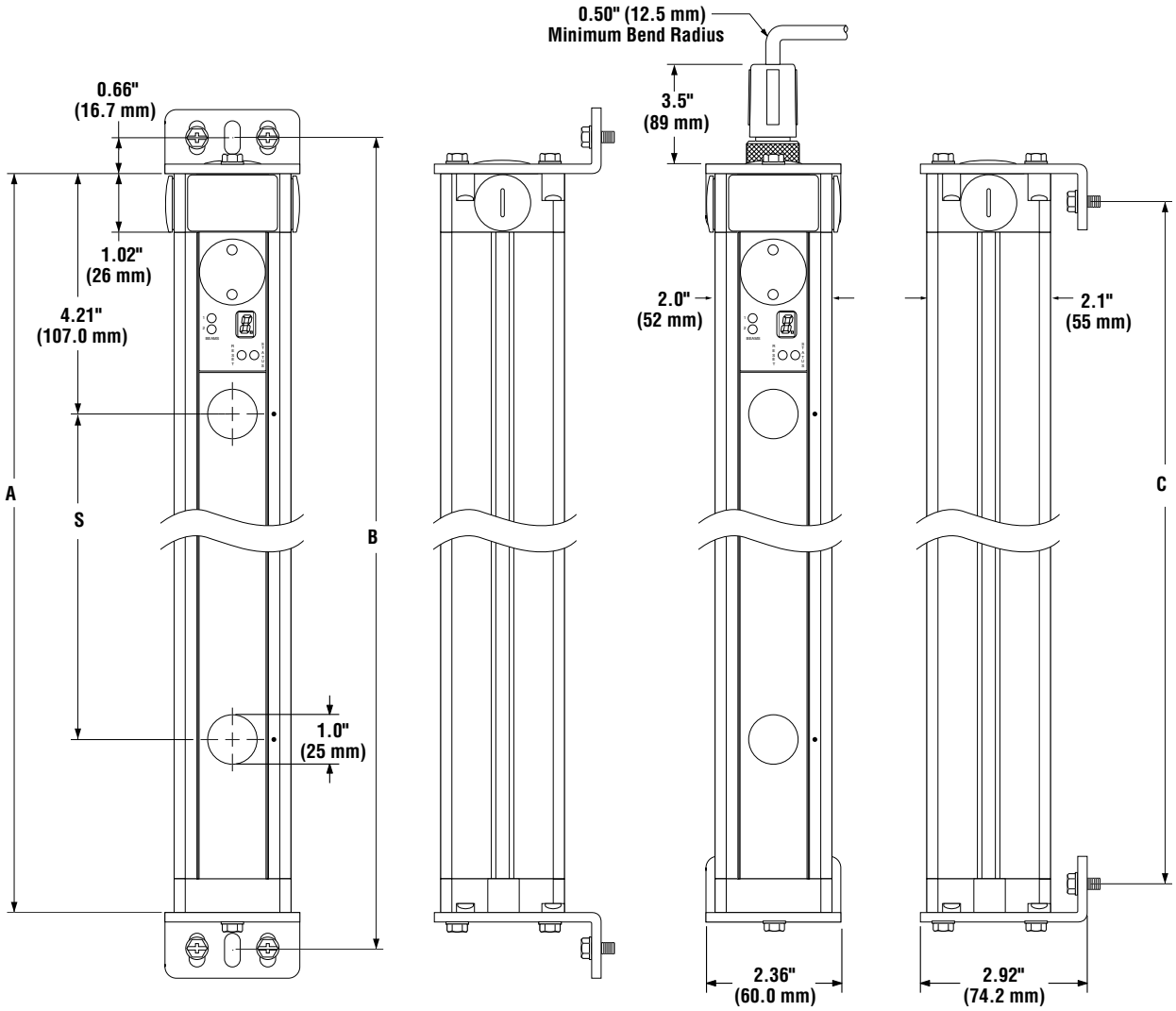

NUMBER OF BEAMS	FIELD OF COVERAGE INCHES (mm)	S BEAM SEPARATION INCHES (mm)	A INCHES (mm)	B INCHES (mm)	C INCHES (mm)
2	19.7 (500)	19.7 (500)	26.9 (684)	28.2 (717)	25.9 (659)
2	23 (584)	23 (584)	30.8 (768)	31.6 (802)	29.3 (743)
3	31.5 (800)	15.7 (400)	38.7 (984)	40.1 (1017)	37.8 (959)
3	42 (1066)	21 (533)	49.2 (1251)	50.6 (1284)	48.3 (1226)
4	35.4 (900)	11.8 (300)	42.7 (1084)	44 (1117)	41.7 (1059)

SELECTING PERIMETER LIGHT BEAM SYSTEM

To determine the 8-digit configured part number for the perimeter light beam system required, follow the directions below and use the information in the **PART NUMBERING SYSTEM CHART** below.

1. The first 3 digits determines the choice of a short range perimeter system or a long range perimeter system.
2. The 4th, 5th, and 6th digits determine the number of beams and beam separation.
3. The 7th digit determines the length of the transmitter cable.
4. The 8th digit determines the length of the receiver cable (can be a different length from the transmitter cable).

SAMPLE

1		2		3		4
P B S	-	3 4 2	-	1	-	2

The sample shown, Part No. PBS-342-1-2, is a short range perimeter light beam system. It has three beams with 21.0” (533 mm) of beam separation, 42.0” (1066 mm) field of coverage, with a 15’ (4.5 m) transmitter cable and a 25’ (7.6 m) receiver cable.

PERIMETER LIGHT BEAM PART NUMBERING SYSTEM CHART

X X X - X X X - X - X

PERIMETER LIGHT BEAM SYSTEM TYPE

PBS	— Short range: 2.62’ to 65.6’ (0.8 m to 20 m)
PBL	— Long range: 49.2’ to 229.6’ (15 m to 70 m)

NUMBER OF BEAMS, BEAM SEPARATION, AND FIELD OF COVERAGE

		NO. OF BEAMS	SEPARATION	FIELD OF COVERAGE
219	—	2	19.7” (500 mm)	19.7” (500 mm)
223	—	2	23.0” (584 mm)	23.0” (584 mm)
331	—	3	15.7” (400 mm)	31.5” (800 mm)
342	—	3	21.0” (533 mm)	42.0” (1066 mm)
435	—	4	11.8” (300 mm)	35.4” (900 mm)

RECEIVER CABLE W/PLUG

0	— No cable
1	— 15’ (4.5 m)
2	— 25’ (7.6 m)
5	— 50’ (15.2 m)
7	— 75’ (22.8 m)
9	— 100’ (30.4 m)

TRANSMITTER CABLE W/PLUG

0	—No cable
1	—15’ (4.5 m)
2	—25’ (7.6 m)
5	—50’ (15.2 m)
7	—75’ (22.8 m)
9	—100’ (30.4 m)

Four (4) end mount swivel brackets are included with each perimeter light beam system for mounting.

LASER ALIGNMENT TOOL—PART NO. LAT-1

A laser alignment tool is available to aid in the alignment of any perimeter light curtain system. It is particularly useful with applications involving mirrors.

The laser alignment tool includes a 9-volt battery, a mounting clip, and has a built-in circular bubble level. **This alignment tool is to be used for set up only.**

LASER SCANNER KITS

RKFD #	MOUNTING	CABLE LENGTH
SCAN001	VERTICLE BASE	10M CABLE
SCAN002	VERTICLE BASE	20M CABLE
SCAN003	HORIZONTAL BASE	10M CABLE
SCAN004	HORIZONTAL BASE	20M CABLE
SCAN005	PROTECTIVE SHIELD	
SCAN006	10M EXTENSION ADDER	
SCAN007	20M EXTENSION ADDER	

RKFD #	MOUNTING	CABLE LENGTH
SCAN021*	UNIVERSAL	15M CABLE
SCAN022*	UNIVERSAL	30M CABLE

**Both Include Protection Brackets & Programming Cable*

SAFETY ZONES	WARNING ZONES	RANGE SAFETY		WARN RANGE	ANGLE	OSSD OUTPUTS	NONSAFE OUTPUTS
6	2	5.5M @ 70MM	3M @ 40MM	40M	275 DEG	2	2
32	2	5M @ 70MM	3M @ 50MM	20M	270 DEG	4	2

MOUNTING OPTIONS

The S3000 safety laser scanner can be mounted vertically or horizontally. A mounting kit (sold separately) is required. S3LMK1 is the base mounting kit—S3LMK2 adds on to the S3LMK1, and S3LMK3 adds on to S3LMK1 and S3LMK2. See the ordering information below.

ORDERING INFORMATION	
PART NO.	**DESCRIPTION**
S3LMK1	Mounting Kit #1 – No Adjustment Capability
S3LMK2	Mounting Kit #2 – Provides Vertical Adjustment (an S3LMK1 is Required in Addition to an S3LMK2)
S3LMK3	Mounting Kit #3 – Provides Horizontal Adjustment (an S3LMK1 and S3LMK2 are Required in Addition to an S3LMK3)

S3000 Mounting Kits

S3000 FLOOR STAND

This floor stand is designed specifically for mounting the S3000 safety laser scanner. The stand is constructed of aluminum extrusion on a steel base plate which can be bolted to the floor.

ORDERING INFORMATION	
PART NO.	**DESCRIPTION**
FKT1093	Floor Stand for S3000 Safety Laser Scanner – 2” x 2” x 16” Extruded Aluminum Post on a 6” x 6” Steel Base Plate

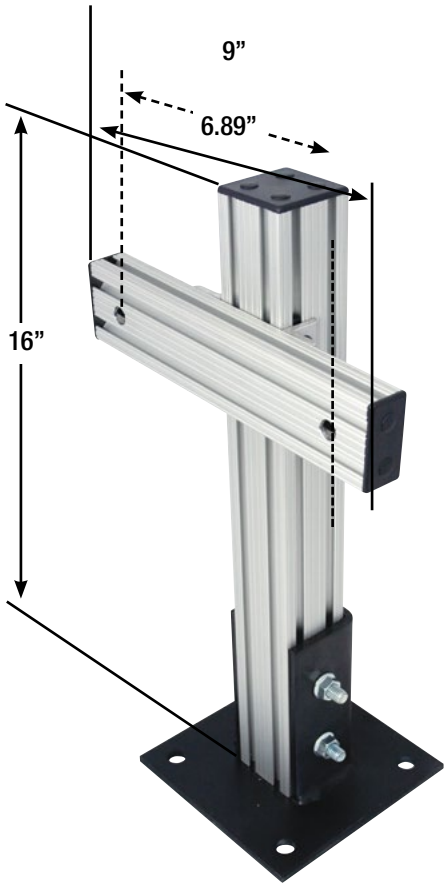

BANNER 70MM 24VDC LIGHT TOWER COMPONENTS

RSI NUMBER	DESCRIPTION	
LIGHT SEGMENT		
TLA70YEL	YELLOW SEGMENT	92212
TLA70RED	RED SEGMENT	92213
TLA70GRN	GREEN SEGMENT	92211
TLA70BLU	BLUE SEGMENT	92214
TLA70RGB14	14 COLOR SELECTABLE SEGMENT	803732
TLA70GYB	GREEN / YELLOW / BLUE SEGMENT*	??

**Only One Color on at a Time, Counts as 3 Segments*

RSI NUMBER	DESCRIPTION	
SOUNDER (AUDIBLE) SEGMENT		
TLA70SOUNDER	SOUNDER, 92dB	92221
TLA70LSOUNDER	LOUD SOUNDER, 85-101dB	96055
TLA70MTSOUNDER	MULTI-TONE SOUNDER, 75- 101dB	801150
TLA70PSOUNDER	PROGRAMMABLE AUDIBLE DEVICE**	801967

***Requires Engineering Time to Program (1 hr)*

RSI NUMBER	DESCRIPTION	
TLA70100	12” POLE ASSEMBLY FOR 1 TO 6 SEGMENTS	92224, 93148, 10444, 78414
TLA70102	12” ADJUSTABLE ANGLE BASE ASSEMBLY	92224, 93148, 10444, 93150

PICK BASE ASSEMBLY AND EACH SEGMENT SEPERATELY UP TO SIX (6) SEGMENTS
NOTE IF LIGHT IS STEADY, SLOW FLASH OR FAST FLASH ON THE SALES ORDER DESCRIPTION
NORMAL ORDER IS – RED TOP COLOR, YELLOW MIDDLE COLOR, GREEN BORROM COLOR WITH SOUNDER AT TOP OF STACK
IF BLUE OR OTHER COLOR IS USED, IT WILL BE ABOVE THE GREEN SEGMENT UNLESS SPECIFIED BY THE CUSTOMER

TOWER LIGHT BRACKET— CMC569M

An optional mounting bracket for self-contained tower light assemblies is available for mounting the tower light in a convenient location. The right angle bracket is made of 12-ga. stainless steel and has curved mounting slots for versatility and orientation.

TOWER LIGHT ASSEMBLY CONTROL BOX—LLD1631

The tower light interface box provides a convenient means of mounting and wiring the tower light. The LLD1631 standard box comes with enough terminals to accommodate five (5) lights or four (4) lights with an alarm in the tower light assembly. This control box is approximately 8” x 6” x 6”.

Inside View of Tower Light Assembly Control Box

NO-GO INDICATOR LIGHT

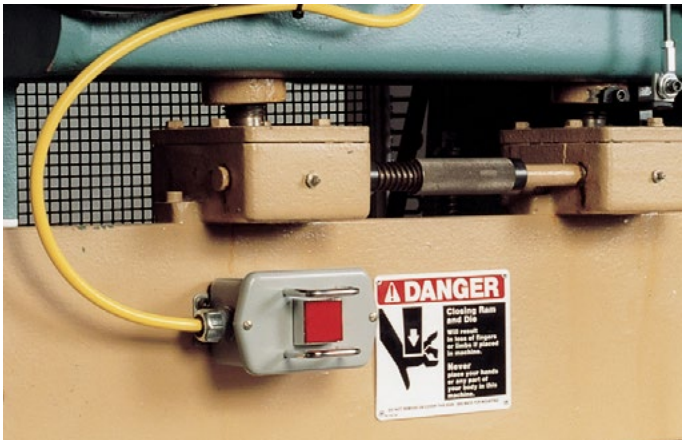

ORDERING INFORMATION	
PART NO.	DESCRIPTION
LLD141	No-Go Indicator Light Mounting Box and Lens Projectors

Most point-of-operation light curtains will not detect workpieces that present a profile of 1/4" or less. However, if the workpiece profile becomes bowed enough to be seen in the plane of light, it will be detected.

On press brake operations, the machine will not start a stroke because the workpiece quite often protrudes through the plane of light and is detected. This becomes frustrating for operators because they have to look to the right or to the left for the red and green indicator lights on the transmitter or receiver to determine if the obstruction is detected. To avoid frustrating the operator, a large red no-go indicator light can be installed on the slide and in the peripheral sight of the operator. This light allows the operator to hold the workpiece in the correct position. At the same time, the no-go light will let them know if their hands or the workpiece is being detected by the light curtain. In some cases, the red no-go indicator light can be used to avoid channel blanking.

The red no-go indicator light has a low-profile design. It is protected from workpieces which bend into the light, and is easily wired into existing light curtain systems.

The no-go indicator light includes the light, the mounting box, and instructions on how to wire it into the light curtain control system.

TEST RODS FOR EZ-SCREEN LIGHT CURTAINS

A test rod is included with each shipment of an EZ-Screen light curtain system. When a light curtain is used for safeguarding, a test rod must be used to test the light curtain after each setup or after any maintenance work performed—refer to pages 60-61 for a sample function-testing checklist for light curtains.

ORDERING INFORMATION	
PART NO.	DIAMETER/MOS (MIN. OBJECT SENSITIVITY)
STP13	0.55" (14 mm)
STP14	1.18" (30 mm)
STP3	1.75" (45 mm)

OPTIONAL MOUNTING BRACKETS FOR POINT-OF-OPERATION LIGHT CURTAIN SYSTEMS —PART NO. EZA-MBK-20

These optional mounting brackets are for use with the point-of-operation light curtain systems on pages 8-14. These brackets are designed to mount point-of-operation light curtain systems to engineered/slotted aluminum framing (for example, Rockford Systems' Ex-Al™ products). Set of two (2).

SAB-A (SWING-AWAY WITH ADJUSTABLE GUARDS) AND SAB-NA (SWING-AWAY WITH NONADJUSTABLE GUARDS) MOUNTING BRACKETS

Swing-away light curtain mounting brackets with guards are ideal for many machines, including gap-frame presses and press brakes, when the light curtain must be swung out of the way for setup, die changes, or maintenance. The light curtain transmitter and receiver are easily aligned when they are swung back into the machine operating position. The 2" square extruded-aluminum brackets include side barrier guards as shown. The nonadjustable portion of these guards can be constructed of black or yellow mesh (1⁄2" square, 16 gauge), or clear polycarbonate (3⁄16"). The lower portion of the barrier guard can be constructed of adjustable, black-oxidized steel hairpins. This allows for feeding of stock, location of chutes, etc., on the sides of the point of operation.

These guards incorporate a hinge assembly on the corner. This allows the light curtain to be swung out. This assembly can also be used to adjust the light curtain panel forward and backward to adjust for safety distance. A built-in locking pin in this assembly holds the panel in place.

Swing-away brackets and barrier guards are built to specifications and measurements provided. See the next page for the appropriate **SAB-A** or **SAB-NA** measurement form.

SAB-A MOUNTING BRACKET

Swing-Away Light Curtain Mounting Bracket with Material Feeding Segment Built Into the Guards

SAB-NA MOUNTING BRACKET

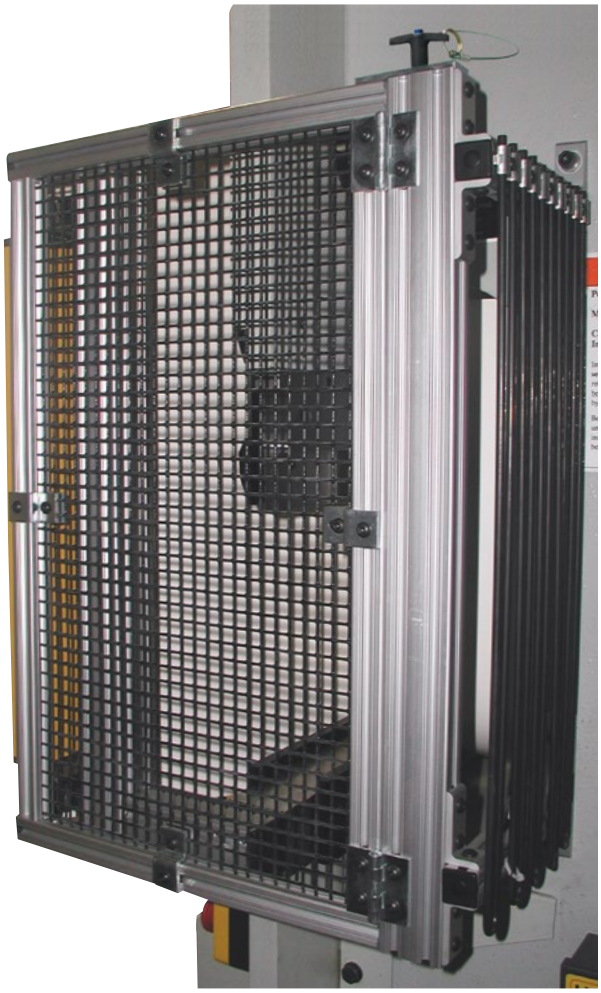

Swing-Away Light Curtain Mounting Bracket with Nonadjustable Guards

SWING-AWAY MOUNTING BRACKET SPECIFICATIONS

SAB-A

(WITH ADJUSTABLE GUARDS)

SAB-NA

(WITH NONADJUSTABLE GUARDS)

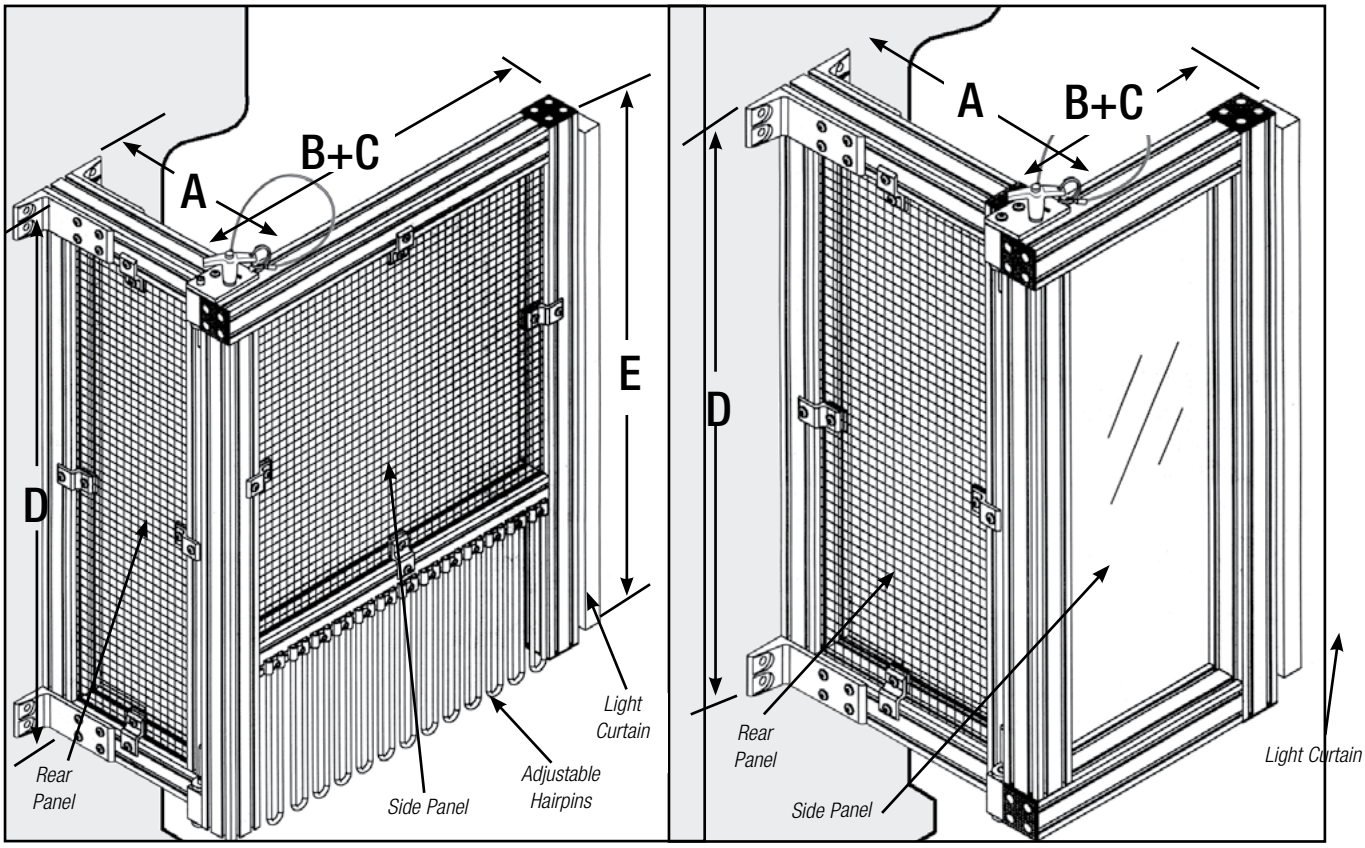

Note: B + C dimension includes safety distance. Stopping time of the machine must be determined to establish the safety distance. Please consult the factory if assistance is needed.

Select the appropriate SAB (swing-away bracket) for your application. If adjustability is required in the lower portion of the barrier guard section, select the mounting bracket **SAB-A**. If adjustability is not required, select the mounting bracket SAB-NA.

Please complete one of the measurement forms (see page 27-29) when ordering these brackets. The A, B, C, D, and E dimensions will be determined from the measurements supplied. Check the material type for the sides and rear panels below.

☐SAB-A

LEFT SIDE OF MACHINE	RIGHT SIDE OF MACHINE
Side Panel Material Type	
☐ Black Mesh ☐ Yellow Mesh ☐ Clear Polycarbonate	☐ Black Mesh ☐ Yellow Mesh ☐ Clear Polycarbonate
Rear Panel Material Type	
☐ Black Mesh ☐ Yellow Mesh ☐ Clear Polycarbonate	☐ Black Mesh ☐ Yellow Mesh ☐ Clear Polycarbonate

☐SAB-NA

LEFT SIDE OF MACHINE	RIGHT SIDE OF MACHINE
Side Panel Material Type	
☐ Black Mesh ☐ Yellow Mesh ☐ Clear Polycarbonate	☐ Black Mesh ☐ Yellow Mesh ☐ Clear Polycarbonate
Rear Panel Material Type	
☐ Black Mesh ☐ Yellow Mesh ☐ Clear Polycarbonate	☐ Black Mesh ☐ Yellow Mesh ☐ Clear Polycarbonate

MEASUREMENT FORM FOR MODELS SAB-A AND SAB-NA SWING-AWAY BRACKETS

Company _____ Address _____

_____

City _____ State _____ ZIP _____

Attention _____ Rep. _____

Machine Mfr. and Model No. _____ Machine No. _____

Measured By _____

Determine which mounting brackets are required: SAB-A (with adjustable barrier guards) or SAB-NA (with nonadjustable barrier guards). Check the bracket type required and complete measurements for the machine where brackets will be applied.

☐ SAB-A*

☐ SAB-NA*

PRESS APPLICATION

Top View

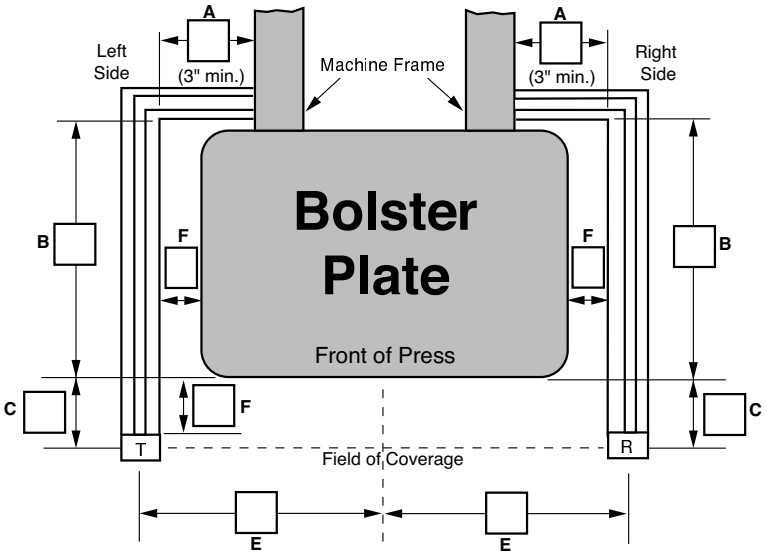

Right-Side View

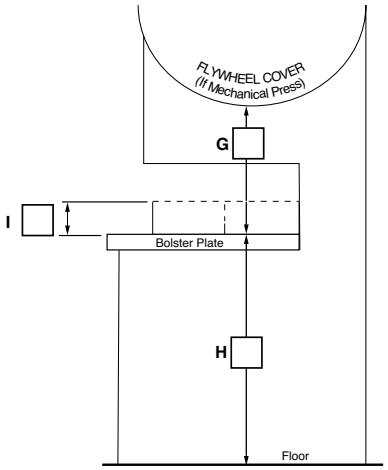

Roof/Floor Sections

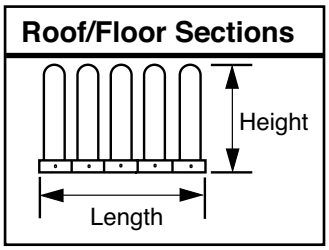

MEASURING INSTRUCTIONS

Check type of press:

☐ Mechanical ☐ Hydraulic ☐ Other

Size of light curtain: _____"

A: Enter dimensions from mounting point on press frame to inside of swing-away mounting bracket. (Be sure bracket extending forward will clear bolster and any obstruction on the side of the press frame.)

B: Enter dimension from front side of machine frame mounting bracket to front edge of bolster plate (assuming nearest pinch point to operator is at the front edge of bolster).

C: Enter the minimum safety distance determined by the safety distance formula. Stopping time of the press must be determined to establish safety distance.

D: Enter the panel height for the guard on the left and right side of machine.

Left_____" Right_____"

Note: The light curtain mounting extrusion will be a minimum of 8" longer than the light curtain field of coverage.

E: If roof section(s) are required, enter E dimension(s) (height) and provide length of roof section(s):
Left_____" Right_____"

F: If floor section(s) are required, enter F dimension(s) (height) and provide length of floor section(s):
Left_____" Front_____" Right_____"

G: If hairpins are required on side panel extending upward, enter G dimension (height) above the guard to the flywheel cover and provide length _____".

H: Height from floor to top of bolster.

I: Maximum feedline height (used to determine hairpin length if adjustable brackets).

Notes:

* 1⁄2" square black mesh will be furnished in the nonadjustable portion of the assembly unless otherwise specified in Notes section above.

Precautions should be taken when applying light curtains for point-of-operation safeguarding. Be sure that someone cannot pass through or stand undetected between the plane of light and the hazard when a light curtain is mounted in a vertical position. If a light curtain must be mounted in this manner due to the safety distance requirements or because of the configuration of the machine, be sure that supplemental safeguarding is provided to safeguard this pass-through area. Examples of supplemental safeguarding include a horizontally mounted light curtain, single-beam devices, guards, or pressure-sensitive safety mats on the floor.

MEASUREMENT FORM FOR MODELS SAB-A AND SAB-NA SWING-AWAY BRACKETS

Company _____ Address _____

_____

City _____ State _____ ZIP _____

Attention _____ Rep. _____

Machine Mfr. and Model No. _____ Machine No. _____

Measured By _____

Determine which mounting brackets are required: SAB-A (with adjustable barrier guards) or SAB-NA (with nonadjustable barrier guards). Check the bracket type required and complete measurements for the machine where brackets will be applied.

☐ SAB-A*

☐ SAB-NA*

PRESS BRAKE APPLICATION

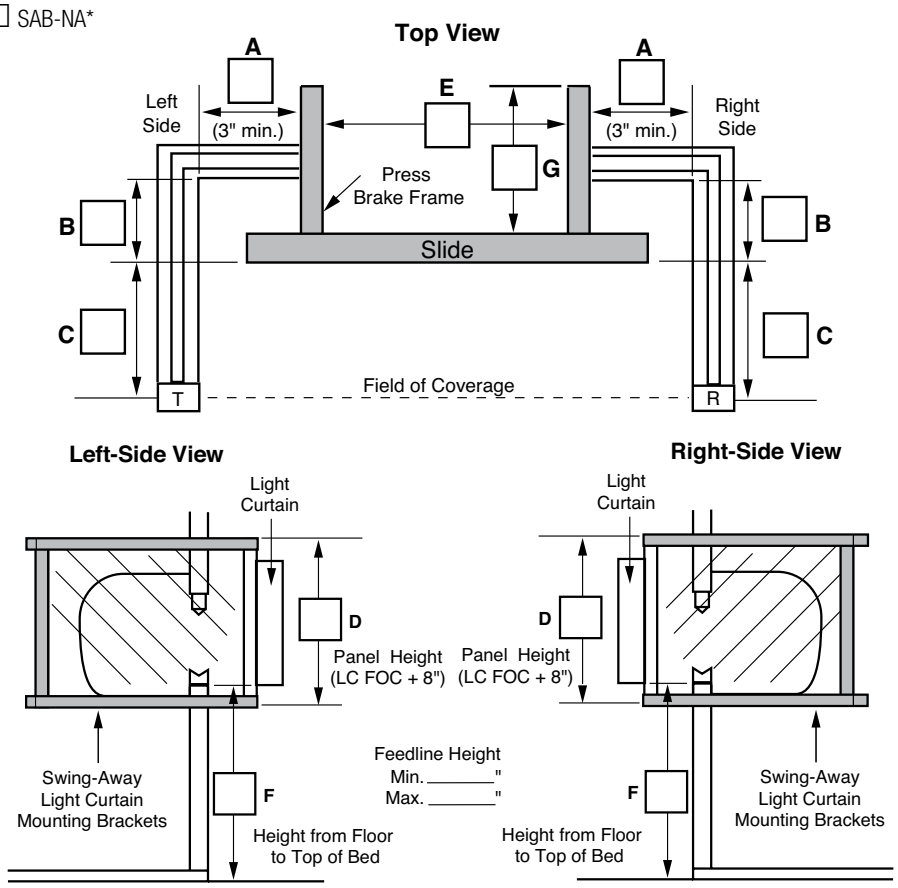

Notes:

** ½" square black mesh will be furnished in the nonadjustable portion of the assembly unless otherwise specified in Notes section above.*

Precautions should be taken when applying light curtains for point-of-operation safeguarding. Be sure that someone cannot pass through or stand undetected between the plane of light and the hazard when a light curtain is mounted in a vertical position. If a light curtain must be mounted in this manner due to the safety distance requirements or because of the configuration of the machine, be sure that supplemental safeguarding is provided to safeguard this pass-through area. Examples of supplemental safeguarding include a horizontally mounted light curtain, single-beam devices, guards, or pressure-sensitive safety mats on the floor.

MEASURING INSTRUCTIONS

Check type of press brake:

☐ Mechanical

☐ Air Clutch

☐ Other

Size of light curtain: _____"

A: Enter dimensions from mounting point on machine frame to inside of swing-away bracket. (Be sure bracket extending forward will clear slide.)

Note: Left and right side dimensions may be different due to an extension on one end of the slide.

B: Enter dimension from front side of machine frame mounting bracket to front of slide or bed.

Note: Left and right side dimensions may be different due to available mounting surfaces on side of machine.

C: Enter the minimum safety distance determined by the safety distance formula. Stopping time of the machine must be determined to establish safety distance.

D: Enter the panel height for the guards on the left and right end of the machine.

Note: The light curtain mounting extrusion will be a minimum of 8" longer than the light curtain field of coverage.

E: Enter inside frame dimension at the rear of machine.

F: Enter height from floor to top of bed. Also provide maximum and minimum feedline height.

G: Enter dimension from back of the slide to rear of machine.

If floor/roof sections are required, please read the instructions (E & F) on the previous page and provide dimensions in the Notes section above.

STATIONARY MOUNTING BRACKET SPECIFICATIONS FOR MODELS: SB-2, SB-3 OBI, SB-3 SS, SB-3 SSG, SB-5, AND SB-5 G

If more than one machine is to be measured, please make copies of this page.

Company _____ Address _____

City _____ State _____ ZIP _____

Attention _____ Rep. _____

Machine Mfr. and Model No. _____ Machine No. _____

Measured By _____ _____

Check the required stationary bracket. If the standard dimensions specified here do not fit your application, indicate the dimensions required. The A dimension for all brackets should be a minimum of 8" more than the light curtain field-of-coverage height.

☐ **SB-2** — 2-Section Mounting Bracket (2-Dimensional)

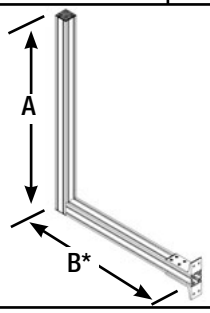

	Std	Req'd
A	32"	
B*	20"	

☐ **SB-3 OBI** — 3-Section Mounting Bracket (3-Dimensional)

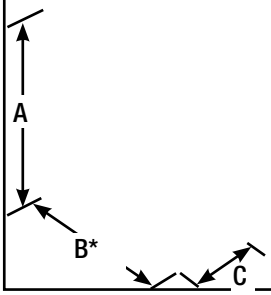

	Std	Req'd
A	32"	
B*	24"	
C	12" (3" Min.)	

☐ **SB-3 SS** — 3-Section Mounting Bracket (2-Dimensional)

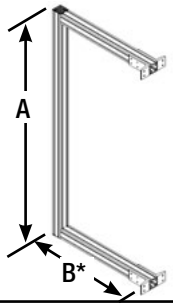

	Std	Req'd
A	44"	
B*	12"	

☐ **SB-3 SSG** — 3-Section Mounting Bracket (2-Dimensional) With Guards

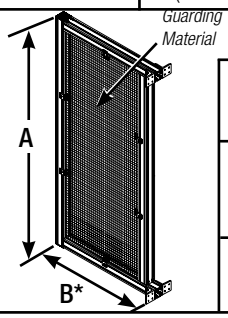

	Std	Req'd
A	44"	
B*	12"	
Guard Mat'l **	Blk	

☐ **SB-5** — 5-Section Mounting Bracket (3-Dimensional)

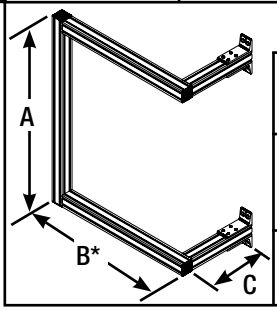

	Std	Req'd
A	36"	
B*	24"	
C	12" (3" Min.)	

☐ **SB-5 G** — 5-Section Mounting Bracket (2-Dimensional) With Guards

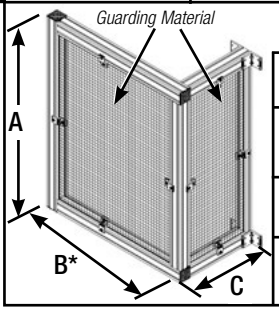

	Std	Req'd
A	36"	
B*	24"	
C	12" (3" Min.)	
Guard Mat'l **	Blk	

*B dimension must include safety distance. Stopping time of the machine must be determined to establish the safety distance. Please consult the factory if assistance is needed.

****CHOICES OF GUARDING MATERIAL**: ½" square or 1" square black (Blk) or yellow (Y) mesh, or polycarbonate (PC). ½" square black mesh is furnished as standard guarding material unless otherwise specified.

STATIONARY MOUNTING BRACKETS

These stationary light curtain mounting brackets are economical, heavy-duty, and versatile. Their design allows them to be tailored to each individual machine. They are available in two-, three-, or five-section assemblies. They are ideal for applications where side barriers (guards) will be fabricated by the user or provided separately. Two of the stationary light curtain mounting brackets can also be furnished with integral guarding material. See the measurement form on the previous page.

The two-section and three-section (SS) brackets can be used whenever mounting brackets can be installed on the front surface of the machine. The three-section (OBI) should be used when the brackets must be mounted to the sides of the machine (see photo). The five-section can also be mounted on the sides of the machine, at both the top and the bottom for greater stability. All of these brackets are designed for use on gap-frame presses or press brakes.

These brackets are constructed of 2" square extruded aluminum which attach to the machine with L-shaped mounting feet. The brackets are fastened to the mounting feet with T-nuts and cap screws. Each mounting foot has two holes which are used for mounting the bracket to the machine. Fasteners are included with each assembly.

3-Section (OBI) Stationary Light Curtain Mounting Bracket (barrier guard has been removed from machine for photo)

Floor Stand With Light Curtain Transmitter (Light Curtain Sold Separately)

Floor Stand With Mirror (Mirror Sold Separately)

When light bars (transmitter or receiver) cannot be conveniently mounted to the machine, a floor stand can be furnished. Floor stands can also be used when safeguarding large work envelopes or perimeter areas. Mirrors or single-beam devices can be attached to the floor stand when the application requires multiple-sided safeguarding. Light bars, single-beam devices, or mirrors can easily be adjusted up or down on any side of the upright extruded-aluminum stand.

This floor stand assembly consists of a 6' length of 2" square extruded aluminum, one base, and two right-angle brackets with fasteners. The base has four holes for permanent attachment to the floor with bolts (not furnished). Other floor stand sizes are available. Please consult the factory.

MIRRORS FOR LIGHT CURTAINS

Mirrors can be used with the light curtain to protect more than one side of the point of operation or work envelope. The mirrors can help protect two, three, and even four sides of the point of operation or perimeter area (see next page). They are usually mounted on a 45° angle at each corner of the area to be safeguarded. Mounting hardware is provided which can be used with the floor stand illustrated on the previous page, or with the SAB-LC/M bracket illustrated on page 39. Shock and vibration isolation mounting fasteners are also provided with each mirror.

The mirror frame is constructed of 11/2" square aluminum extrusion with a rubber gasket. This gasket protects the mirror from machine vibration and shock load.

ORDERING INFORMATION	
PART NO.	**DESCRIPTION OF MIRROR**
KTR226	7" Field of Coverage
KTR227	12" Field of Coverage
KTR228	16" Field of Coverage
KTR229	18" Field of Coverage
KTR230	21" Field of Coverage
KTR231	24" Field of Coverage
KTR232	28" Field of Coverage
KTR233	35" Field of Coverage
KTR234	36" Field of Coverage
KTR235	42" Field of Coverage
KTR236	48" Field of Coverage
KTR237	56" Field of Coverage

Special-size mirrors are available upon request.

ADJUSTABLE MIRROR MOUNTING BRACKET —PART NO. MMB-F

Adjustable mirror mounting brackets are available for mounting mirrors to floor stands. These brackets are designed to provide easier alignment between light curtains and mirrors. Each adjustable mirror mounting bracket consists of two pieces of 1" x 2" extruded aluminum (48" long) connected by a rotating corner bracket. Please contact Rockford Systems if the standard dimension does not meet your requirements.

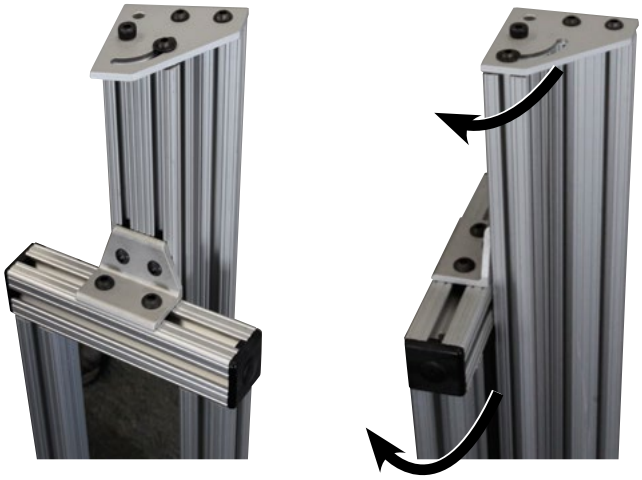

Adjustable Corner Bracket Provides Easy Alignment

LIGHT CURTAIN AND MIRROR SWING-AWAY MOUNTING BRACKETS (PART NO. SAB-LC/M)

These brackets can be used on a variety of machines which require two-sided or three-sided light curtain protection. One light curtain and one mirror provide two-sided protection; one light curtain and two mirrors provide three-sided protection (see illustration).

The left and right sides of these brackets have the ability to adjust in both directions. This provides flexibility for different production runs so the light curtain can always be mounted at the proper safety distance.

The assembly for **three-sided** protection consists of the brackets on the left and right side plus the rear barrier guards. One light curtain and two mirrors (see previous page for mirror part numbers) must be ordered separately.

The assembly for **two-sided** protection consists of one left-side bracket or one right-side bracket. Please specify at time of order. One light curtain and one mirror must be ordered separately. One floor stand or one light curtain mounting bracket is also required to mount the other light bar. See pages 32-38 for brackets, floor stands, and mirrors.

This drawing is for illustrative purposes only.

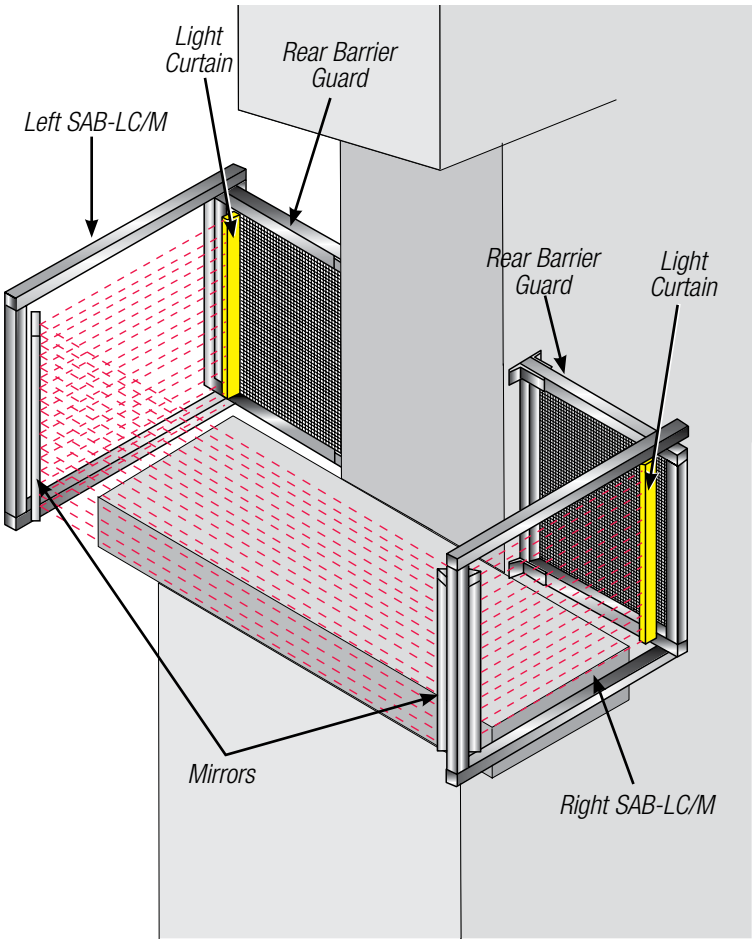

Three-Sided Application With SAB-LC/M Mounting Brackets

TWO-HAND CONTROL

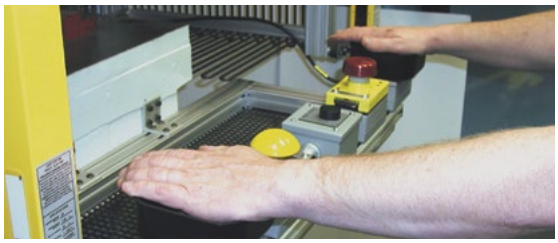

Two-hand control can be used as a safeguarding device in the single-stroke mode of operation on part-revolution clutch presses and hydraulic press and press brakes.

There are many requirements that must be met before two-hand control can be used as a point-of-operation safeguard. These requirements are located in OSHA 29 CFR 1910.217 and ANSI B11.1, B11.2, B11.3, and B11.19. We have referenced the following paragraphs for your convenience:

OSHA

(c)(3)(i) Point-of-operation devices shall protect the operator by:

(e) Requiring application of both of the operator's hands to machine operating controls and locating such controls at such a safety distance from the point of operation that the slide completes the downward travel or stops before the operator can reach into the point of operation with his hands;

(c)(3)(vii) The two-hand control device shall protect the operator as specified in paragraph (c)(3)(i)(e) of this section.

(a) When used in press operations requiring more than one operator, separate two-hand controls shall be provided for each operator, and shall be designed to require concurrent application of all operator controls to activate the slide. The removal of a hand from any control button shall cause the slide to stop.

(b) Each two-hand control shall meet the construction requirements of paragraph (b)(7)(v) of this section.

(c)The safety distance (Ds) between each two-hand control device and the point of operation shall be greater than the distance determined by the following formula:

Ds = 63 inches/second x Ts where:

Ds = minimum safety distance (inches);

63 inches/second = hand speed constant; and

Ts = stopping time of the press measured at approximately 90° position of crankshaft rotation (seconds).

(d) Two-hand controls shall be fixed in position so that only a supervisor or safety engineer is capable of relocating the controls.

(b)(7)(v) Two-hand controls for single stroke shall conform to the following requirements:

(a) Each hand control shall be protected against unintended operation and arranged by design, construction, and/or separation so that the concurrent use of both hands is required to trip the press.

(b) The control system shall be designed to permit an adjustment which will require concurrent pressure from both hands during the die closing portion of the stroke.

(c) The control system shall incorporate an antirepeat feature.

(d) The control system shall be designed to require release of all operator hand controls before an interrupted stroke can be resumed.

ANSI

The following formula is used to compute the minimum safety distance (Ds) on mechanical power presses to meet the ANSI (American National Standards Institute) B11.1 press safety standard:

Ds = K x (Ts + Tc + Tr + Tspm) where:

K = Hand speed constant (63 inches/second)

Ts = Stop time of equipment measured at the final control element

Tc = Response time of the control system

Tr = Response time of the two-hand control device and its interface

Tspm = Additional time allowed for the stopping performance monitor to compensate for variations in normal stopping time

Dpf = The added distance due to the depth penetration factor. Note: If the channel blanking feature is used on light curtains, additional safety distance must be enforced based on the number of channels blanked.

When determining the safety distance, a portable or built-in stop-time measuring unit must be used to check the stopping time (Ts) of the machine. Please see pages 5-6 for details on a portable STM (stop-time measurement) device.

The application of any safeguarding device, the requirements of proper machine interface, as well as the safety distance formulas may be difficult to understand and apply. When any of these safeguarding devices detailed in this section are a consideration, these factors must be evaluated. To help understand how to apply these devices, we offer monthly safeguarding seminars to educate the employer/user on the safety requirements.

ALL-IN-ONE TWO-HAND CONTROL

The all-in-one two-hand control is a NEMA 12 control box with a control module, two relays, a terminal strip, and two buttons. Everything in the control box is prewired and ready for the user to bring wires in from the machine actuator.

FEATURES

- Buttons must be maintained (actuated) during hazardous portion of the cycle
- Nonresumption of an interrupted cycle
- Provides control reliability of the two-hand control portion of the control system
- Compact design for ease in mounting and can be easily applied to small machines or devices
- Choice of control actuating buttons
- Available in 24 V DC or 115V DC

The all-in-one two-hand control can be applied to most any machine or device that is pneumatically, hydraulically, or electrically operated that is usually manually fed. These machines or devices include small presses, stakers, riveters, and assembly machines. The all-in-one two-hand control can be used as a point-of-operation safeguarding device **as long as it is located at the proper safety distance**. For more information on two-hand control or two-hand trip, see pages 35 and 36-37. See the chart on the next page for selecting the proper two-hand control part number.

For information on mechanical and hydraulic power press and press brake controls, please call us toll-free at 1-800-922-7533, or visit our Web site at www.rockfordsystems.com.

All-In-One Two-Hand Control With Banner Buttons

All-In-One Two-Hand Control with Allen-Bradley (A-B) Buttons on Sides and Emergency-Stop Button on Front

SELECTING AN ALL-IN-ONE TWO-HAND CONTROL

To determine the 6-digit configured part number for the two-hand control required, follow directions 1-4 below and use the information in the **PART NUMBERING SYSTEM CHART** below.

1. The first 3 digits for all two-hand controls are THC
2. The 4th digit determines the type of run button, if provided, on the control enclosure. Zero (0) indicates no run buttons provided.
3. The 5th digit determines the type of emergency-stop button, if provided. Zero (0) indicates no emergency button provided.
4. The 6th digit is for the operating voltage existing at the machine.

TWO-HAND CONTROL PART NUMBERING SYSTEM CHART

THC - X X - X

TWO-HAND CONTROL (RUN BUTTONS ON SIDES OF ENCLOSURE)

THC	— Two-Hand Control

OPERATING VOLTAGE AT MACHINE

0	— 115 V AC
1	— 24 V DC
2	— Line Voltage — Includes Multi-Tap Transformer

RUN BUTTON OPERATOR TYPE

0	— Remotely Located
1	— Rees Black Palm Buttons With Rockford Systems Guards
2	— A-B Articulated Palm Buttons With Guards
3	— IDEC Green Push Button With Guards
4	— A-B Zero-Force Touch Buttons With Guards (90-264 VAC)
5	— Opto-Touch Buttons With Guards (20-30 VAC/DC)
6	— Square D Mushroom Push Buttons With Guards
7	— Rees Chrome Light-Push Palm Buttons With Rockford Systems Guards
8	— Ergonomic Safeball Palm Button

EMERGENCY-STOP TYPE (ON FRONT OF ENCLOSURE)

0	— None
1	— Red 40 mm Two-Position — Twist-to-Return Type

Rees Black Palm Button With RSI Guard

A-B Articulated Palm Button With A-B Guard

IDEC Button With Guard

A-B Zero-Force Touch Button With Guard

Opto-Touch Button With Guard

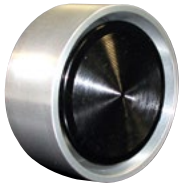

Mushroom Push Button With Guard (SQ-D)

Rees Chrome Light-Push Button With RSI Guard

Ergonomic Safeball Palm Button

Red Two-Position E-Stop —Twist-to-Return

All buttons have 1 NO and 1 NC contact arrangement.

TWO-HAND TRIP

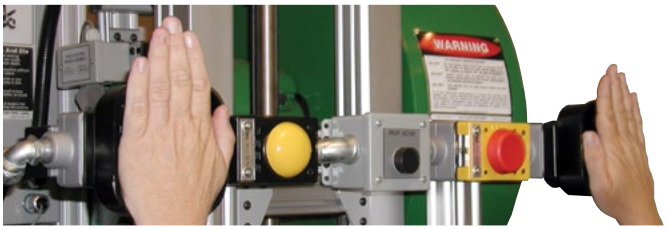

Note: There are two (2) possible applications for two-hand trip on full-revolution-clutch presses: to initiate a press cycle only, or as a method of safeguarding the point of operation for operators. In both instances, OSHA has established certain requirements. Applicable ANSI standards can also be referenced for two-hand trip.

(1) TWO-HAND TRIP

—USED AS A METHOD OF INITIATING A PRESS CYCLE ONLY

F(b)(6)

(i) A two-hand trip shall have the individual operator's hand controls protected against unintentional operation and have the individual operator's hand controls arranged by design and construction and/or separation to require the use of both hands to trip the press and use a control arrangement requiring concurrent operation of the individual operator's hand controls.

(ii) Two-hand trip systems on full-revolution-clutch machines shall incorporate an antirepeat feature.

(iii) If two-hand trip systems are used on multiple- operator presses, each operator shall have a separate set of controls.

This description covers the use of two-hand trip as an initiating means only, to obtain a press cycle. It does not provide any type of point-of-operation safeguarding. Some other properly applied and installed guard or device must also be provided in accordance with OSHA 29 CFR 1910.217(c).

(2) TWO-HAND TRIP—USED AS A METHOD OF SAFEGUARDING THE POINT OF OPERATION.

TWO-HAND TRIP

(c)(3)(i) Point-of-operation devices shall protect the operator by:

(e) Requiring application of both of the operator's hands to machine operating controls and locating such controls at such a safety distance from the point of operation that the slide completes the downward travel or stops before the operator can reach into the point of operation with his hands;

(c)(3)(viii) The two-hand trip device shall protect the operator as specified in paragraph (c)(3)(i)(e) of this section.

(a) When used in press operations requiring more than one operator, separate two-hand trips shall be provided for each operator, and shall be designed to require concurrent application of all operator controls to activate the slide.

(b) Each two-hand trip shall meet the construction requirements of paragraph (b)(6) of this section.

(c) The safety distance (Dm) between the two-hand trip and the point of operation shall be greater than the distance determined by the following formula:

D_m = 63 inches/second x Tm where:

D_m = minimum safety distance (inches);

63 inches/second = hand speed constant; and

T_m = the maximum time the press takes for the die closure after it has been tripped (seconds). For full-revolution-clutch presses with only one engaging point, Tm is equal to the time necessary for one-and-one-half revolutions of the crankshaft. For full-revolution-clutch presses with more than one engaging point, Tm shall be calculated as follows:

$$T_m = \left[1/2 + \frac{1}{\text{Number of engaging points per revolution}} \right] \times \text{time necessary to complete one revolution of the crankshaft (seconds)}$$

Note: See chart (next page) for easy reference when applying two-hand trip on full-revolution presses.

(d) Two-hand trips shall be fixed in position so that only a supervisor or safety engineer is capable of relocating the controls.

When applying two-hand trip to meet the requirements for a point-of-operation safeguarding device, make sure the buttons are located on the press so they are at least the minimum safety distance required by the preceding OSHA formula. Refer to the chart on the next page.

This means the palm buttons must be located far enough away so that after the press is tripped and the operator releases one or both palm buttons, the operator cannot "beat the ram" or reach into the point of operation or other pinch points before the dies close.

TWO-HAND TRIP SAFETY DISTANCE CHART

To establish the proper safety distance for two-hand trip on full-revolution-clutch presses, determine the speed of the press in SPM (strokes per minute) when running in the continuous mode and the number of engagement points in the clutch mechanism. Then determine the ***Safety Distance*** *from the following chart.*

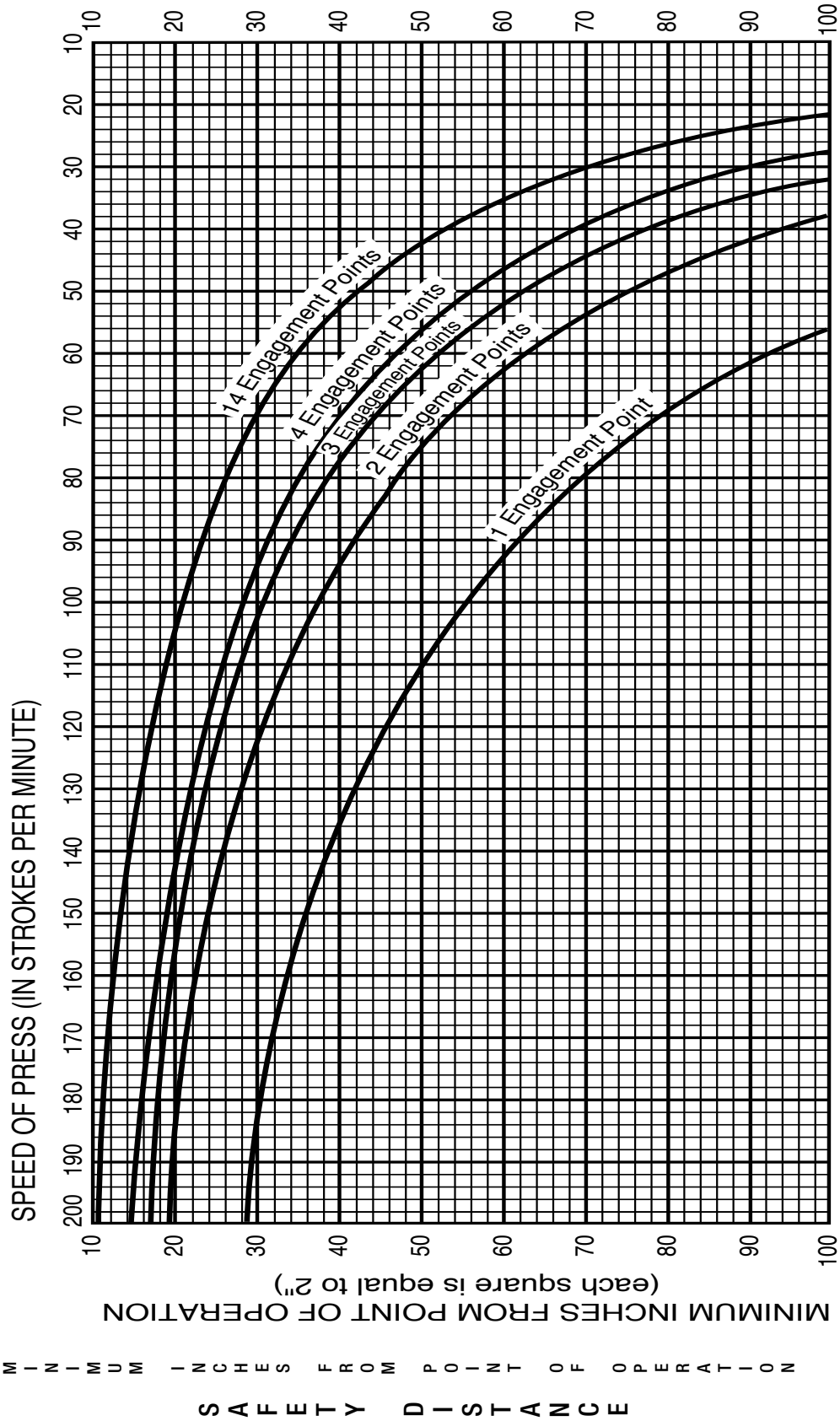

Each square is equal to 2" of safety distance.

1, 2, 3, 4, and 14 engagements points in the clutch mechanism are the most common. Machines with other engagement points may exist.

GATE OR MOVABLE BARRIER DEVICE

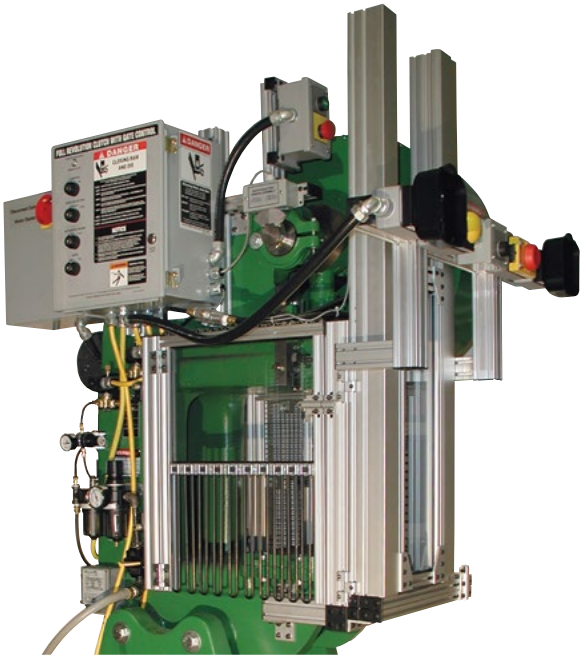

Example of a Type A Gate Package

INTRODUCTION

Why use a gate device? According to the OSHA and ANSI standards, "operators must be prevented from inadvertently placing their hands or any other body parts in the point of operation during the die-closing portion of the press stroke." The movable gate device uses a proven method of placing a physical barrier between the operator and the point-of-operation hazard during the die-closing portion of the press stroke.

Other advantages of gate devices include the following:

1. Operators are not physically attached with wristlets to the machine as they are when using a pullback or restraint device. This means operator resistance is minimized because of the nonrestrictive design allowing more freedom of movement.
2. These devices protect other employees in the machine area.
3. A foot switch can be used to actuate the press. This minimizes stress to the hands and arms which can be caused by palm buttons.

Two types of gates are available. The first is a type A gate. It protects the operator during the entire machine cycle. This means the gate will not open until after the machine's cycle is complete and stopped (usually in the up position). Type A gates are the only gates that should be used on full-revolution-clutch presses.

The second is a type B gate. It protects the operator during the downstroke only. The gate can open after the hazardous portion of the cycle has passed. Both type A and B gates can be used on part-revolution-clutch machines, hydraulic presses, and other cyclic machines where material is being manually fed.

TYPE A GATE SEQUENCE OF OPERATION

When the actuating means (palm buttons or foot switch) is operated, air pressure is released from the bottom of the gate-operating cylinder. This allows the gate to descend by gravity. Once the gate is fully down, a gate-down proximity switch senses this and the machine is allowed to make a cycle. If the gate cannot complete its downward travel, this gate-down proximity switch will not sense the gate and will prevent a machine cycle.

If the actuating means is released before the machine starts its cycle, the gate returns to the full open position with a type A gate. When the machine is actually making a cycle, air pressure is applied to the top of the gate-operating cylinder which holds the gate down and prevents it from being raised until the machine has completed its cycle. If the machine malfunctions and does not stop at the end of a normal cycle, the gate remains in the closed position.

According to ANSI (see next page), the gate must open after every cycle in order to reset the antirepeat system. If this does not happen, the machine will not make another stroke. To accomplish this, the gate control requires a signal from the machine at the open position. This signal is normally obtained from a photo-sensor or limit switch operated by a cam. Actuation of the limit switch is accomplished by the rotation of the crankshaft or any other member of the machine which makes one cycle or oscillates along one axis every stroke.

When a type A gate package is furnished for a full-revolution-clutch machine, the top-dead-center signal is provided by a limit switch assembly.

TYPE B GATE SEQUENCE OF OPERATION

The type B gate operates in a similar manner as the type A gate. When the actuating means (palm buttons or foot switch) is operated, air pressure is released from the bottom of the gate-operating cylinder. This allows the gate to descend by gravity. Once the gate is fully down, a gate-down proximity switch senses this and the machine is allowed to begin the cycle. If the gate cannot complete its downward travel, this gate-down proximity switch will not sense the gate and will prevent a machine cycle.

TYPE B GATE SEQUENCE OF OPERATION (CONTINUED)

If the actuating means is released before the machine starts its cycle, the gate returns to the full open position. When the machine is actually making a cycle, air pressure is applied to the top of the gate-operating cylinder which holds the gate down and prevents it from being raised until the hazardous portion of the cycle has passed.

The gate must open every cycle in order to reset the antirepeat system. The sequence for this is the same as for the A gate described on the previous page.

OSHA AND ANSI REQUIREMENTS FOR POWER PRESSES

The OSHA requirements for gate or movable barrier devices are located in 29 CFR 1910.217(c)(3)(i) as follows:

(c)(3)(i) Point-of-operation devices shall protect the operator by:

(f) Enclosing the point of operation before a press stroke can be initiated, and maintaining this closed condition until the motion of the slide has ceased; or

(g) Enclosing the point of operation before a press stroke can be initiated, so as to prevent an operator from reaching into the point of operation prior to die closure or prior to cessation of slide motion during the downward stroke.

(c)(3)(ii) A gate or movable barrier device shall protect the operator as follows:

(a) A Type A gate or movable barrier device shall protect the operator in the manner specified in paragraph (c)(3)(i)(f) (above) of this section, and

(b) A Type B gate or movable barrier device shall protect the operator in the manner specified in paragraph (c)(3)(i)(g) (above) of this section.

Note: OSHA states that the gate must enclose the point of operation. The gates illustrated are furnished as a single-panel only, allowing access to the point of operation. Other guarding material is required to safeguard the sides and back of the point of operation. Complete the proper measurement form (page 41, 43, or 44) if these need to be supplied with the gate.

The ANSI requirements for gates or movable barrier devices are located in 8.6.6 of ANSI B11.1.

8.6.6 Movable Barrier Device

1) A movable barrier device, when used, shall enclose the point of operation before a press cycle (stroke) can be initiated.

2) The device shall prevent the individual from reaching the hazards associated with the point of operation by reaching over, under, around, or through the device when in the closed position.

3) In conjunction with the press control, the device shall actuate the clutch and initiate the press cycle (stroke).

4) The barrier shall be capable of being returned to the open position should it encounter an obstruction prior to enclosing the point of operation.

5) The device shall require opening of the barrier to reset the antirepeat system of the press production system every time the press stops before a successive cycle (stroke) can be initiated.

6) The device shall be in compliance with 6.11 and 8.8.

7) The device shall provide visibility to the point of operation when necessary for safe operation of the press production system.

8) The device in and of itself shall not create a hazard to the operator or others.

8.6.6.1 Type A movable barrier device

1) A type A movable barrier device, when used, shall protect the individuals as specified in 8.6.1 (e).

2) The type A movable barrier device shall, in normal single-cycle operation, be designed to hold in the closed position until the slide has completed its cycle (stroke) and has stopped at top of cycle (stroke).

8.6.6.2 Type B movable barrier device

1) A type B movable barrier device shall protect the individuals as specified in 8.6.1 (f).

2) The device shall not be used on full-revolution-clutch presses.

3) The device shall, in normal, single-stroke operation, be designed to hold in a closed position during the closing portion of the cycle (stroke), or until cessation of slide motion during the closing portion of the cycle (stroke).

4) When the protection of the operator is dependent upon the stopping action of the press, a stopping-performance monitor shall be required in conformance with 6.12.

GATE ASSEMBLIES

Basic Gate Assembly (Without Side or Rear Safeguarding)

GATE CONSTRUCTION

The panel framework of these gates is constructed of 1" x 2" extruded aluminum which slides up and down on roller bearings in a rail extrusion. The panel of the gate is furnished with either clear polycarbonate (3/16"-thick) or an adjustable lower section.

The standard gate assembly is furnished with hinges allowing it to swing open. A button-head cap screw on a locking plate holds the gate in place. This feature is useful when changing dies or working on dies in the machine.

The gate assembly can be furnished with side guards. The gate and side panel can be swung open to the left when changing dies. A dead-bolt latch is located on the right extrusion. When side guards are furnished, this latch releases the gate so it can be swung completely open.

These gates are easily mounted on the bolster of the machine or on a special plate or bracket on the front of the machine.

The gate assemblies listed are designed for a variety of machines, including full-revolution-clutch presses. Side guards are also required when using a gate. Gates are made according to the measurements submitted. Please complete the appropriate measurement form on page 41,43 or 44 for a complete assembly.

GATE ASSEMBLY COMPONENTS

- Gate frame assembly
- Gate panel
- Proximity switch (24 V DC only) or limit switch
- Air cylinder(s)
- Quick dump valves
- Air flow control valves
- Solenoid air valve assemblies
- 1/8" air regulator gauge and mounting bracket
- Extrusion, hinge assembly, and mounting hardware

PRICING/ORDERING INFORMATION

The following information is required to order or price a gate assembly:

1. Choose a gate lift height of either 12"* or 18"*
2. Provide gate's **outside dimensions** in height and width

OR

Provide gate's **inside opening dimensions** in height and width

*Other lift heights are available. Please complete the measurement form on page 41,43 or 44.

For full-revolution-clutch presses, part-revolution-clutch presses, or hydraulic presses with a gate interface, please consult the factory.

GATE ASSEMBLY & BARRIER GUARD MEASUREMENT FOR STRAIGHT-SIDE, HYDRAULIC, OR COLUMN-TYPE MACHINES

If more than one machine is to be measured, please make copies of this page.

1 Company _____ Address _____

City _____ State _____ ZIP _____

Attention _____ Rep. _____

Mach. Mfr. & Model No. _____ Mach. No. _____ Measured By _____

Check Type of Machine: ▯ **Straight Side (SSG)** ▯ **Hydraulic (HG)** ▯ **Column (CG)**

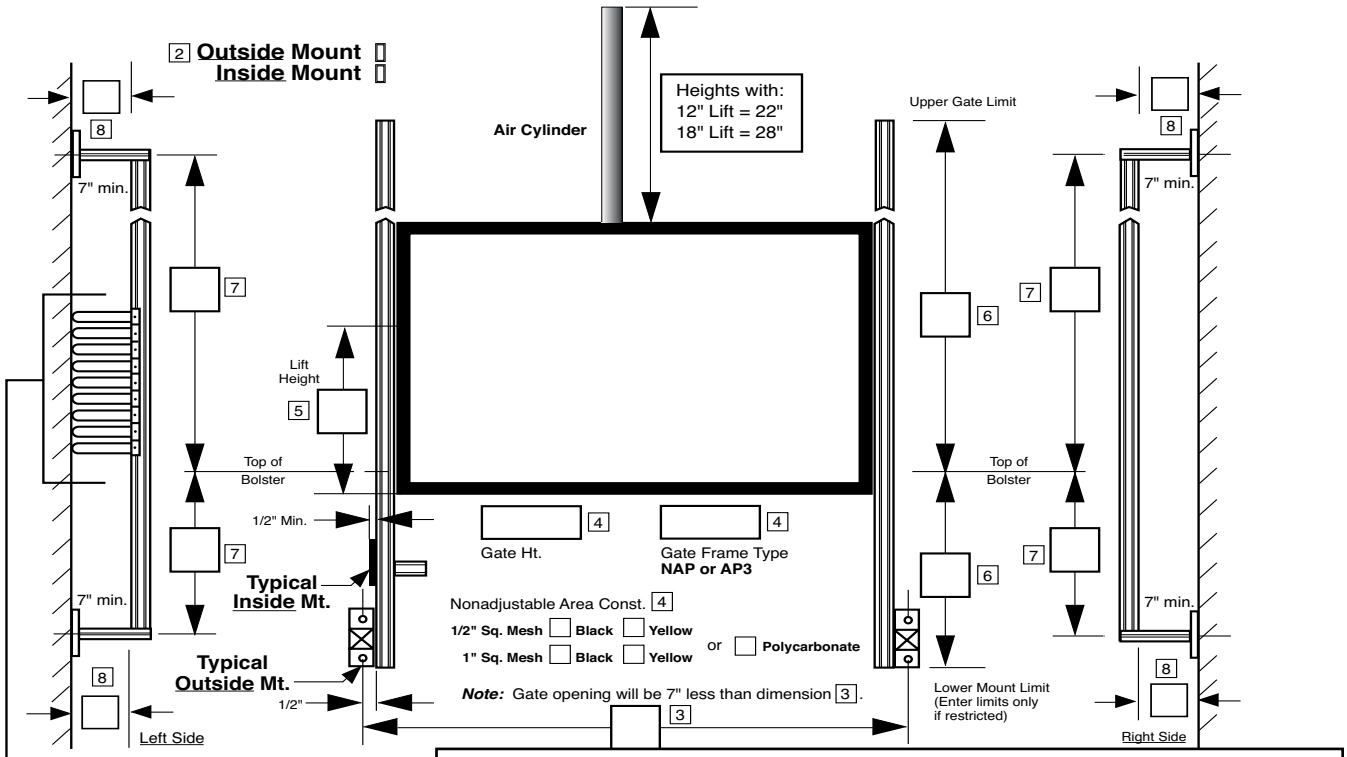

5 GATE LIFT HEIGHT

▯ 12" ▯ 18" ▯ Other _____"

8 MOUNTS: ▯ FMG ▯ EMG

9 SIDE GUARDS

	H	L
Left Side		
Right Side		

10 FLOOR SECTION

Gate	H	L

11 HINGED GATE

▯ No ▯ Yes–Type of Interlock:
▯ Locking ▯ Nonlocking

12 CHOOSE ONE

▯ Proximity Switch (24 V DC only)
▯ Limit Switch

MEASURING INSTRUCTIONS

The gate assembly measurement form is designed to be used for the XL1SSG, XL1HG, or the XL1CG.

1. Fill in the complete heading as indicated.
2. Check whether an **Outside** or **Inside** mount is required. (See lower left side of front view drawing for examples.)
3. Enter center mounting dimension. The gate opening will be approximately 7" smaller than this dimension.
4. Enter gate height, frame type, and construction of nonadjustable area.
5. Enter gate lift height: 12", 18", or other.
6. Enter upper and lower gate mount limits, if any.
7. If outside mounted, enter the appropriate location of upper and lower mounting point for each mount.
8. Enter the desired length and type of mount supports; either FMG for direct or EMG for extended. Allow for any obstructions (7" minimum).
9. Enter dimensions for side guards if required.
10. Indicate if floor section is required for the gate frame. Provide height and length.
11. Indicate if hinged gate is required. If yes, indicate the type of interlock switch required.
12. Choose a proximity switch (for 24 V DC only) or a limit switch.

MEASURING INSTRUCTIONS FOR GATE ASSEMBLY MODELS XL2G THROUGH XL6G

The following instructions are for measuring XL2G through XL6G gate assemblies and barrier guards. The basic information necessary to quote or fabricate any of the listed gates and barrier guards is the size of the gate, the frame type, nonadjustable area construction, height of panel(s), panel segments (if required), and mounts to attach the gate and guards to the machine. **The length of all panels will be determined by Rockford Systems.**

The following instructions are purposely kept as simple as possible to avoid long explanations of the many variations available.

1. Fill in the complete heading as indicated.

2. Check appropriate gate model number.
   XL2G = 2 panel and gate
   XL3G = 3 panel and gate
   XL4G = 4 panel and gate
   XL5G = 5 panel and gate
   XL6G = 6 panel and gate

(If any panels are not required, cross them out in the panel chart.)

3. Measure and record the bolster width and depth.

4. Measure web width of frame, if the barrier guard is to be mounted to the front of the frame behind the bolster plate.

5. Measure and record the distance from the mounting point of the guard on the frame of the machine to the rear of the bolster. Measure and record the outside width of the press frame behind the bolster plate.

6. Indicate desired position of L and R panels and gate relative to the bolster. Drawing shows panels and gate outbound of the bolster. If panels or gate should be inbound, enter minus (-) dimensions, or on the bolster, enter zero.

7. Enter the minimum and maximum feedline heights. Enter distance from the bottom of the gate to bolster (usually 0 inches). If below bolster, enter inches.

8. Measure and record the clearance from the flywheel cover or obstruction to the top of the bolster. This dimension could affect the panel height if the panel is to be swung underneath. Indicate if view is from left or right side of the machine.

   When measuring, be sure the gate will lift completely without hitting any obstruction.

9. Measure and record the feedline depth.

10. Indicate the gate lift height required, normally 12" or 18" is sufficient.

11. Indicate mounts required for **LR, L, R**, or **RR** panels.

SFM	Side Frame Mount
SFM7	Side Frame Mount (3", 5", or 7")
SFM24	Side Frame Mount up to 24"
FFM	Front Frame Mount

Note: The panel will begin approximately 2½" from the mounting point with the SFM, SFM7, or SFM24 mount. The panel will begin approximately 1" from the mounting point with the FFM mount.

12. Indicate frame type for each panel and gate.

NAP	Nonadjustable Panel
AP1	Adjustable Panel (1/2 frame)
AP2	Adjustable Panel (5/8 frame)
AP3	Adjustable Panel (3/4 frame)
AP4	Adjustable Panel (Center—Full frame)
AP5	Adjustable Panel (Lower—Full frame)
API	Adjustable Panel (Inclinable)

   The gate can ONLY be NAP or AP3.

13. Indicate the construction of the nonadjustable area for each panel.

B	1/2" Sq. Black Mesh (16 gauge)
B1	1" Sq. Black Mesh (12 gauge)
Y	1/2" Sq. Yellow Mesh (16 gauge)
Y1	1" Sq. Yellow Mesh (12 gauge)
PC	Polycarbonate (3/16" thick)

   The gate is normally polycarbonate.

14. Indicate height of each panel.

15. Indicate length of each panel. **Rockford Systems will determine length(s) based on other dimensions provided.**

16. Indicate panel segment type, height, length, and if hinged or nonhinged, if required.

FS	Feeder Segment
AS	Adjustable Segment
PCS	Polycarbonate Segment
ES	Empty Segment

17. Indicate if **L, LF, Gate, RF,** or **R** panels require an interlock switch and choose locking or nonlocking.

18. Indicate if **L, LF, Gate, RF,** or **R** panel needs to be hinged (L or R).

   The gate ALWAYS hinges left.

19. Indicate if hairpins are required in place of **LR** or **RR** panel. The number of hairpins supplied will be determined by the height of the **L** or **R** panel. Indicate the height of hairpins required in the box.

20. Indicate if roof section(s) are required. Provide height and length.

21. Indicate if floor section(s) are required. Provide height and length.

22. Choose proximity switch (for 24 V DC only) or limit switch.

GATE ASSEMBLY & BARRIER GUARD MEASUREMENT FORM—GAP OR C-FRAME MACHINES

GATE ASSEMBLY WITH MULTI-PANEL GUARDS—XL2G, XL3G, XL4G, XL5G, XL6G

If more than one machine is to be measured, please make copies of this page.

(See previous page for instructions.)

1 Company _____ Address _____

City _____ State _____ ZIP _____

Attention _____ Rep. _____

Mach. Mfr. & Model No. _____ Mach. No. _____ Measured By _____

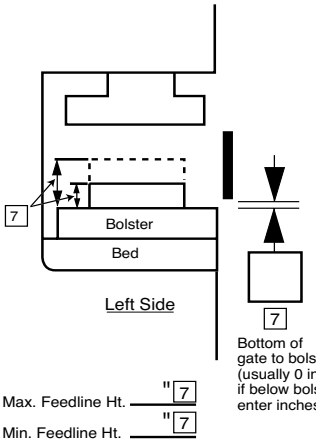

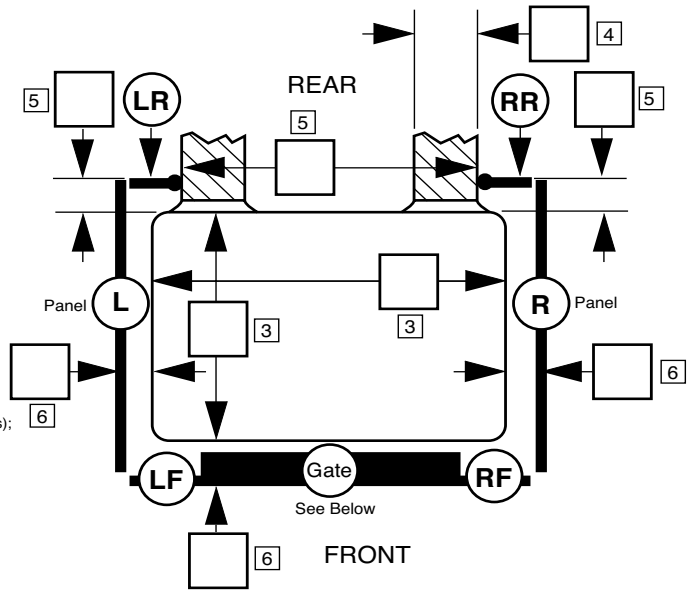

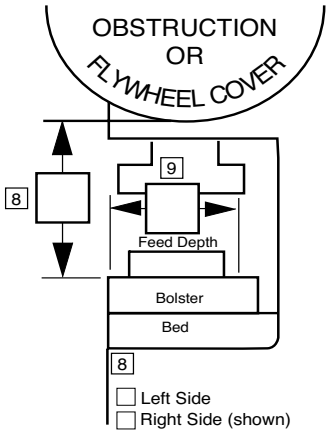

Notes:

2 MODEL
☐ XL-2G ☐ XL-3G
☐ XL-4G ☐ XL-5G
☐ XL-6G

10 GATE LIFT HEIGHT	
☐ 12"	☐ Other
☐ 18"	____"

11 MOUNTS	
☐ SFM	☐ SFM-3, -5, -7 (Circle one)
☐ SFM-24	☐ FFM

17 ELEC. INTERLOCK	
☐ Locking	☐ Nonlocking

22 CHOOSE ONE
☐ Proximity Switch (24 V DC only)
☐ Limit Switch

PANEL CHART

Panel	LR	L	LF	Gate	RF	R	RR
Frame Type NAP, AP1, AP2, AP3, AP4, AP5, API	12	12	12	12	12	12	12
Nonadjust. Area Const. B, B1, Y, Y1, PC	13	13	13	13	13	13	13
H (Height)	14	14	14	14	14	14	14
L (Length) RSI To Complete	15	15	15	15	15	15	15
Panel Segment Type FS, AS, PCS, ES	16	16	16	X	16	16	16
H (Height)				X			
L (Length)				X			
H (Hinged) NH (Nonhinged)	X			X			X
Electrical Interlock Y (Yes) N (No)	X	17	17	Y	17	17	X
Hinged L or R	X	18	18	L	18	18	X
Hairpins (In place of LR or RR)	19	X	X	X	X	X	19

20 **ROOF SECTION**

	Panel	H	L
*	L		
	LF		
	Gate		
	RF		
*	R		

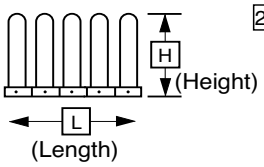

21 **FLOOR SECTION**

Panel	H	L
L		
LF		
Gate		
RF		
R		

Indicate in the Notes section above if a vertical section of hairpins is required above the L or R panel.

SWING-AWAY GATE ASSEMBLY & BARRIER GUARD MEASUREMENT FOR STRAIGHT-SIDE, HYDRAULIC, OR COLUMN-TYPE MACHINES

If more than one machine is to be measured, please make copies of this page.

1 Company _____ Address _____

City _____ State _____ ZIP _____

Attention _____ Rep. _____

Mach. Mfr. & Model No. _____ Mach. No. _____ Measured By _____

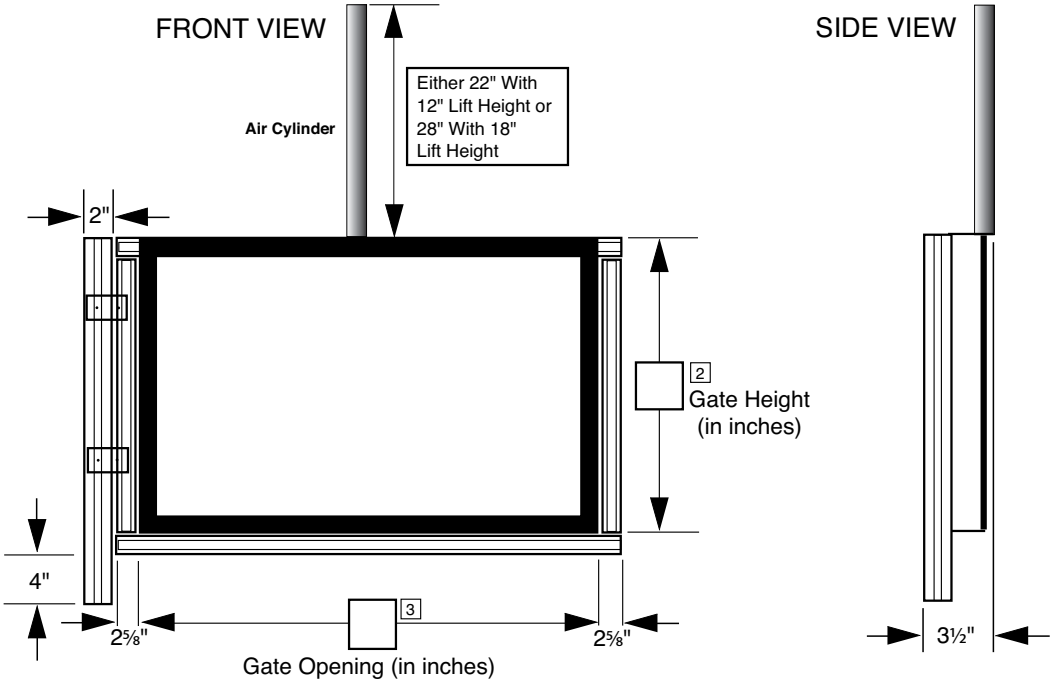

INSTRUCTIONS

1. Provide complete information.
2. Determine gate height required.
3. Determine gate opening required.
4. Determine gate lift height required.
5. Choose gate panel construction required.
6. Choose proximity switch or limit switch.
7. Choose type of interlock switch.

GATE ASSEMBLY COMPONENTS

- Gate frame assembly
- Gate panel
- Proximity switch (24 V DC only) or limit switch
- Air cylinder(s)
- Air flow control valves
- Quick dump valves
- Solenoid air valve assemblies
- ⅛" air regulator gauge and mounting bracket
- Extrusion, hinge assembly, and mounting hardware

4 GATE LIFT HEIGHT

☐ 12" ☐ 18" ☐ Other _____"

5 GATE PANEL CONSTRUCTION

Check box 1 or 2 below:

1. ☐ NAP (Nonadjustable Panel)—Choose from the following:

Nonadjustable Area

☐ Polycarbonate **OR**

☐ Wire Mesh

☐ ½" Square **or** ☐ 1" Square

☐ Black **or** ☐ Yellow

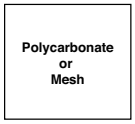

Gate Panel

2. ☐ AP3 (Adjustable Panel)—Choose from the following:

Nonadjustable Area

☐ Polycarbonate **OR**

☐ Wire Mesh

☐ ½" Square **or** ☐ 1" Square

☐ Black **or** ☐ Yellow

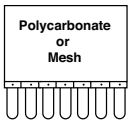

Gate Panel

Adjustable Area—Hairpin will be 4" maximum.

6

☐ Proximity Switch (24 V DC only) ☐ Limit Switch

7

☐ Locking Interlock ☐ Nonlocking Interlock

PRESSURE-SENSITIVE SAFETY MATS

Safety mats are intended to be used as auxiliary or additional safeguarding equipment to protect operators and other employees in the machine area. They must not be used as the primary method of safeguarding except when all other means are not applicable.

These mats can safeguard many types of machines. Consider the following when choosing mats:

1) How is the mat to be interfaced to the existing motor control or equipment? Does a new control or starter need to be added?
2) Can the motion of the machine that is creating the point-of-operation hazard be stopped quickly? If it can, what kind of clutch and brake arrangement does it have? Is the machine hydraulically or pneumatically operated? Is it operated by any other means?

Before applying a safety mat to any machine, make sure it will be interfaced correctly with the machine control and make sure it does not interfere with productivity. The whole machine system must be considered, including safeguarding, machine control, disconnects, starters, covers for rotating parts, auxiliary parts, feeding and retrieving of workpieces, etc.

The pressure-sensitive, heavy-duty safety mats described on these pages are highly resistant to wear, oils, grease, acids and most common chemicals.

These mats function in two different ways. One way is that the machine will not start if someone or some object is on the mat. Another way is that if the machine is already operating or cycling, it will stop if someone steps onto the mat. In this case, the machine needs to be restarted once the mat has been cleared.

The mat(s) must be located so an operator or other employee, when stepping onto the mat, cannot reach into the point-of-operation hazard prior to the machine's hazardous motion coming to a stop. See ANSI/RIA R15.06 robot safety standard for detailed guidelines on mat safety distance. Also see the ANSI B11.19 for guidelines on mat control system reliability.

MATS CAN BE APPLIED TO MANY DIFFERENT MACHINES AND AUXILIARY EQUIPMENT FOR PROTECTION.

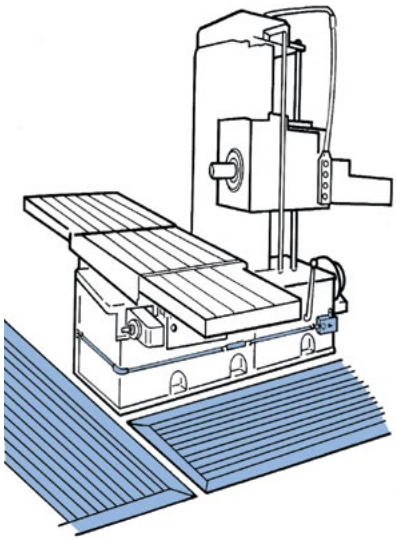

Drilling, Milling, and Boring Machines

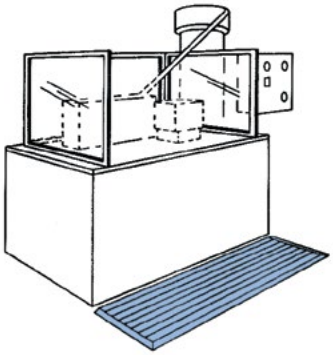

Assembly Machines

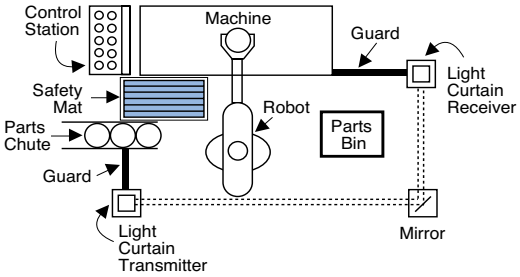

Robots and Auxiliary Equipment

REPLACEMENTS FOR LRS/RKR/THS CONTROLLERS				
PART NO.	**DEVICE**	**APPLICATION**	**DESCRIPTION**	
GIC2508	Mat Controller – Buttons on Door	For use with safety mats. When used with multiple mats, they are wired in series	Manual reset with safety bypass control and indicators for interlocks closed [green light] and in safety bypass moe [yellow light]	Provides 2 normally open/held closed dry contacts & 3 normally closed/ held open interlock outputs
GIC2509	Mat Controller – Plain Door			
GIC2510	Bump Switch Controller – Buttons on Door	For use with bump or edge switches.For more than 1 switch, wire in series		
GIC2511	Bump Switch Controller – Plain Door			

PRESSURE-SENSITIVE SAFETY MATS (CONTINUED)

The heavy-duty pressure-sensitive safety mats offered have been successfully used to provide auxiliary safeguarding for the hazard areas that exist in many industrial environments. Some of these include:

- Robotic welding
- Laser welding/cutting
- Water jet machines
- Pick-and-place robots
- Plastics molding machines
- Assembly machines
- Automated material handling
- Packaging machinery
- Textile machinery
- Conveyors
- Paper converting machinery
- CNC punches and tube benders

The single-piece molded construction of these safety mats means these mats will not delaminate. The mats encase conductive plates which provide stop/restart signals when pressure is applied or released. Each mat top surface has a rib pattern running parallel with the mat length which helps prevent slipping, yet is easy to clean.

All mats are supplied with a 20' single-jacketed, four-wire cord exiting from the width end of the mat. The outside edge of each mat has a lip to attach either an aluminum ramp or a blunt edge. The lip can also be removed when joining two mats with a mat connector. The mat dimensions provided are for the active area of the mat.

These mats can be supplied individually or in multiple configurations. They are available in various sizes and can be tied together (electrically) in series.

The part numbers listed in the chart on the next page do not include any ramps, blunt edges, or connectors. Follow the instructions below the chart to add ramp edging.

Note: A mat control box Part No. RKR162, or Zone Monitor

MAT SPECIFICATIONS

Operating Temperature ..... -35° to 120°F
..... (-37° to 49°C)
Individual Mat Sizes ..... 12" x 12" to 48" x 72"
Activation Force ..... 3 to 5 ft/lb (normal foot traffic)
Mat Cover Material ..... Molded vinyl
Shore A Hardness ..... 72 ± 2
Mat Cable Length ..... 20 ft
Load Capacity ..... 3,000 psi
Applicable Standards.... Designed to meet or exceed ANSI B11.19,
..... OSHA 1910.212, and ANSI/RIA R15.06

ELECTRODE ASSEMBLY:

- Normally open switch
- High-durability 24-gauge steel
- 18-gauge, 4-wire, single-jacketed lead wires and optional application-specific wiring options
- Hermetically encapsulated switch and lead wires
- Designed to meet IP67 and NEMA 6
- Water-tight and totally submersible

For a complete chemical resistance chart, contact the factory.

STANDARD MATS

These heavy-duty pressure-sensitive safety mats are constructed of molded vinyl material. The molding encases two separated parallel steel plates. These plates make contact when the mat is stepped on. They have a black, ribbed pattern top surface to help prevent slipping and are easy to clean.

The mats are active over the entire surface, except the narrow border. They are designed for low-voltage (24-V DC) control circuits.

All standard size safety mats can be modified, i.e., with notches, cutouts, angles, or holes. Various configured layouts of any dimension can be supplied. Various colors, sizes, and shapes of mats are available along with different wiring options to meet your requirements. To obtain an assessment to meet your needs, submit a layout drawing complete with all dimensions and a list of your specific requirements.

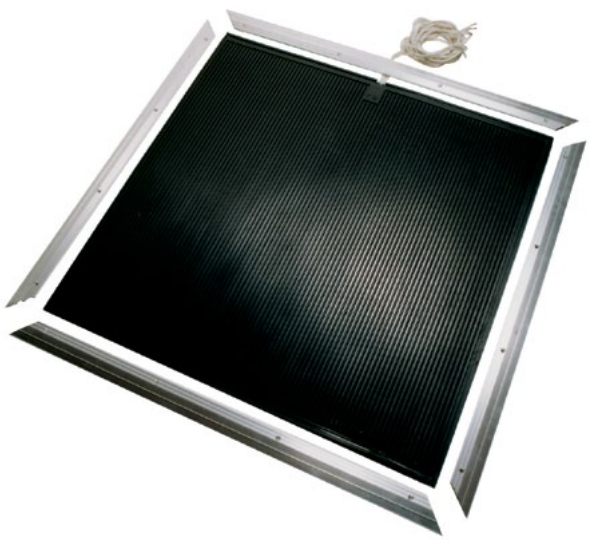

Part No. PSM2436-1
Safety Mat (Includes EDG1000 Series Ramp Edging)

The pressure-sensitive safety mat information in the chart is for mats without EDG1000 Series ramp edging. To include mitered ramp edging on all four sides of the mat, add a1 to the part number and add 4” to both the width and length provided in the chart.

All mats are furnished with a 20’ four-wire cord that exits the mat at the width end.

STANDARD MAT SIZES		
PRESSURE-SENSITIVE MATS CHART		
PART NO.	WIDTH	LENGTH
PSM1212	12”	12”
PSM1224	12”	24”
PSM1236	12”	36”
PSM1248	12”	48”
PSM1260	12”	60”
PSM1272	12”	72”
PSM1636	16”	36”
PSM1824	18”	24”
PSM1836	18”	26”
PSM1848	18”	48”
PSM1860	18”	60”
PSM1872	18”	72”
PSM2420	24”	20”
PSM2424	24”	24”
PSM2430	24”	30”
PSM2436	24”	36”
PSM2442	24”	42”
PSM2448	24”	48”
PSM2456	24”	56”
PSM2460	24”	60”
PSM2472	24”	72”
PSM2828	28”	28”
PSM2833	28”	33”
PSM2843	28”	43”
PSM2856	28”	56”
PSM3030	30”	30”
PSM3036	30”	36”
PSM3042	30”	42”
PSM3048	30”	48”
PSM3060	30”	60”
PSM3072	30”	72”
PSM3432	34”	32”
PSM3444	34”	44”
PSM3456	34”	56”
PSM3636	36”	36”
PSM3642	36”	42”
PSM3648	36”	48”
PSM3660	36”	60”
PSM3672	36”	72”
PSM4132	41”	32”
PSM4144	41”	44”
PSM4156	41”	56”
PSM4848	48”	48”
PSM4860	48”	60”
PSM4872	48”	72”

RAMP EDGING, BLUNT EDGING, AND MAT CONNECTORS

An aluminum ramp-edged mat system can be customized to fit any shape or size area. Custom-made mats can fit most areas and even provide cutouts for machine legs, posts, or other obstructions. Send us a layout drawing with complete dimensions of the area the mats need to cover, and we will provide an assessment for the required mats and accessories.

RAMP EDGING
EDG1000 SERIES

Surface installations: for easy roll-on of carts, trucks, and walk on.

Part No. EDG-1052-N (2" W x 52" L)

Part No. EDG-1096-N (2" W x 96" L)

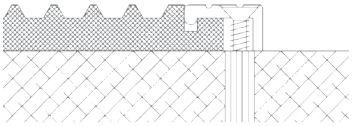

BLUNT EDGING—EDG-2000 SERIES

Recessed installations: for flush edges against thresholds, walls, and machines.

Part No. EDG-2052-N (¾" W x 52" L)
Part No. EDG-2096-N (¾" W x 96" L)

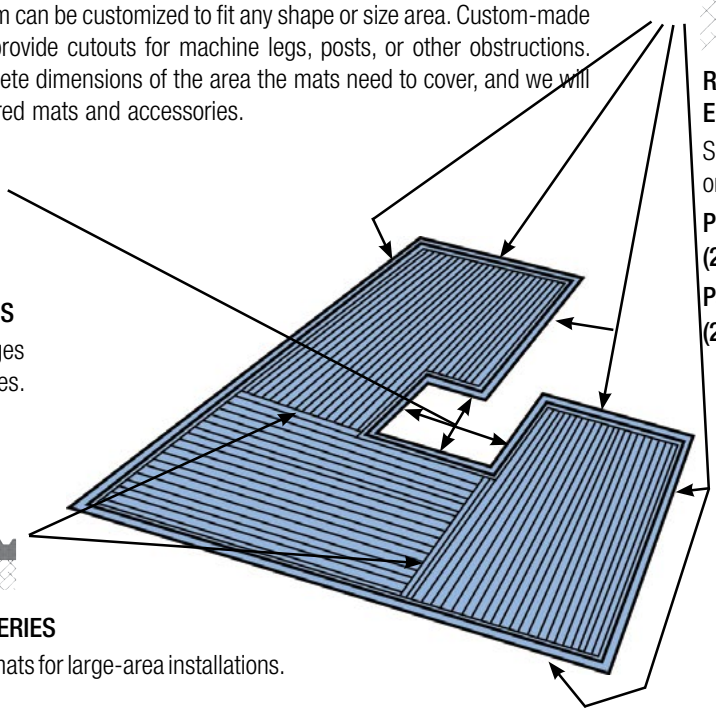

MAT CONNECTORS—CON-1000 SERIES

Joins mats together: permits add-on mats for large-area installations.

Part No. CON-1052-N (52" L)
Part No. CON-1096-N (96" L)

THE MAT EDGE STYLE & MAT MEASUREMENT

The lip edge is the most common and widely used edge style for mats for single mat applications. The lip can be removed to create the square edge for use with the CON-1000 series mat connector.

**This dimension is not included in the mat widths and lengths. Do not include this in your measurements.*

MAT CONTROLS

MAT CONTROL BOX—PART NO. GIC2508 & GIC2509

This mat control box provides an interface for the safety mats to the existing machine control. If someone steps on the mat while the machine is operating or cycling, the control is designed to provide a stop signal; or, if someone is on the mat(s), the stop signal will not allow the machine to start a cycle. If special applications of this control are required, please consult the factory.

This mat control is furnished in a dust- and oil-tight NEMA 12 enclosure and includes a selectable latch-out feature. When the latch-out feature is turned on, the machine will not automatically be able to restart until the latch-out has been cleared. This is accomplished with the use of the key-operated selector switch. When the latch-out feature is turned off, the machine can be restarted when the mat is cleared.

CONTROL BOX SPECIFICATIONS

Voltage ..... 115VAC, 60 Hz
Output-Relay Contacts Rating ..... 10 A, 115VACResistive

MAT CONTROLS (CONTINUED)

If the mat control box Part No. RKR162 is not required, a DIN-rail mounted control module is available. Each control module has 4 NO safety contacts and 1 NC auxiliary contact. The control module allows operation in either automatic or manual reset modes.

ORDERING INFORMATION	
PART NO.	**DESCRIPTION**
RFT139	120 VAC, 24-V DC Control Module

Part No. RFT139
This DIN-rail mount control module can be mounted into an existing enclosure.

MAT JUNCTION BOXES

If multiple mats are grouped together to provide auxiliary or perimeter (work-envelope) safeguarding, junction boxes may be required to facilitate the installation.

Use either mat junction box with either the mat control box RKR162 (previous page) or a DIN-rail mount control module from above. Each mat junction box includes 20' of four-wire cord.

ORDERING INFORMATION	
PART NO.	**DESCRIPTION**
RKR020	Mat Junction Box to Accommodate From 2-5 Safety Mats
RKR021	Mat Junction Box to Accommodate From 2-10 Safety Mats

Part No. RKR021
This mat junction box can provide wiring for up to 10 mats for easy tie-in to the mat control.
(Cover has been removed for photo.)

DETECT-A-FINGER® GEN II DROP-PROBE DEVICES FOR RIVETERS

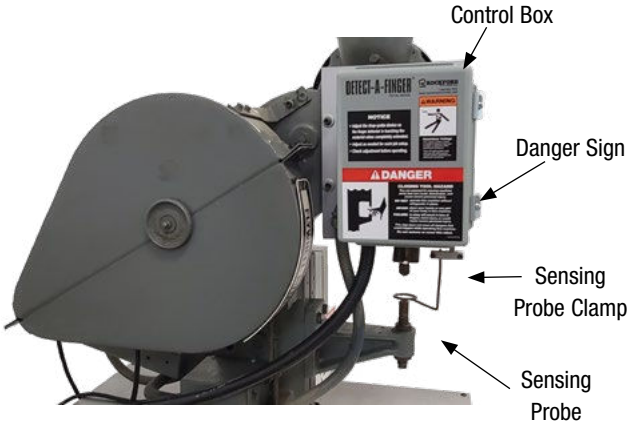

INTRODUCTION

For organizations that use riveters and welders, the new and improved Detect-A-Finger Gen II drop-probe device helps to protect operator's fingers from pinch-point hazards and meets the compliance requirements for a Category 2 safeguarding device. The Gen II upgrades include a longer stroke up to 1.85", unified right- and left-handed operation, a pre-punched enclosure to achieve faster electrical connections, and a softer probe rod for accurate template development, designed to provide a safer and more cost effective solution that reduces the potential for operator bypassing. The Detect-A-Finger drop-probe devices are used on small machines, such as riveters, eyeletters, stakers, staplers, crimpers and fastening machines, to help protect the operator's fingers from point-of-operation hazards. To make retrofitting older models quick and easy, the Gen II features the identical mounting pattern as the original model, creating a "drop-in" solution that is simple to deploy.

RKC008 AND RKC009 SERIES

HOW IT WORKS

The aluminum "template" probe is shaped by the user to fit each application. This template is then used as an aid to facilitate the forming of the "permanent" steel hexagonal drop probe, which can be adjusted from 0" to 1.85" and are keyed to the device, thereby preventing operator bypassing. These devices are designed to drop by gravity. If a finger or workpiece is in the way of the probe and the probe is not allowed to complete its downward travel, the machine will not start a cycle or stroke. On these models, the rotary solenoid is in the control box and when energized, after initiation of the cycle, allows the probe to drop. A spring returns the probe to its starting or up position. Another drop-probe device uses interlocking cams in its operating mechanism. The control box consists of the probe arm, rotary electric solenoid, two-hand control safety relay, redundant limit switches, basic circuit with terminals and other mechanical mechanisms. On machines that are mechanically operated, an air cylinder or electric solenoid may have to be added to the operating linkage to trip the machine. On machines that are hydraulically or pneumatically operated, the drop-probe control can usually be interfaced with the existing control system.

When updating machines to meet safety standards, please make sure that each machine is looked at as an individual system that includes, but is not limited to, safeguarding (drop-probe device), machine control, disconnect switch, motor starter, covers for rotating components, auxiliary parts, lockout/tagout equipment, and feeding and retrieving of workpieces. Two 20" drop-probe rods are furnished with each control box: one aluminum template and one hexagonal steel permanent rod. These rods are shaped by the user for the workpiece or assembly requirements.

SEQUENCE OF OPERATION

The operator initiates the cycle of the machine usually by an overt action on the foot switch. This energizes the rotary solenoid in the control box, which allows the drop probe to drop until it makes contact with a limit switch. If an obstruction, such as a finger, gets in the way of the probe, the limit switch is not contacted and the machine does not start its cycle. If nothing obstructs the probe and the limit switch is operated, a relay will signal the machine to start its cycle or cause it to trip. Next, the relay drops out, de-energizing the control box solenoid, allowing the probe to move up and out of the way. At this time, the machine completes its cycle and stops. The foot switch must be released and re-initiated to begin another cycle.

The Detect-A-Finger Gen II is available in two models: Part No. RKC009 is for mounting on the right side of a machine (probe on left), and Part No. RKC008 is for mounting on the left side of a machine (probe on right). Rockford Systems also offers a new drop-probe kit (FCT057), that includes a clamp, one soft aluminum rod to aid in creating a template, and one tougher steel hex probe. If needed, add the FOOT SWITCH (CTD088). Complete installation instructions and a maintenance manual are furnished with each device.

Select the Detect-A-Finger Gen II For Riveters that allows the sensing probe to enter the point of operation, without obstructing the work area, and provides for as short and rigid of a sensing probe design as possible.

ALTERNATIVE PINCH-POINT SAFETY SYSTEM

Our new, premium solution – the UNITROL SOFT TOUCH Pinch-Point Safety System – is the first and only fully passive safeguarding equipment designed to prevent a pneumatic riveter, welder or other small machine from applying full force if it detects fingers in the machine's point-of-operation area by measuring electrical continuity between electrodes. If anything other than metal is present between the electrodes, their sensors will not detect continuity and the electrodes will open automatically.

Please call 1-800-922-7533 to learn more about Rockford Systems' range of riveting and welding safety solutions.

SPECIFICATIONS AND OPERATING DATA

CONTROL BOX

Part Number.....RKC008 or RKC009
Fuse.....313 Series, 3AG, 3 Amps,
.....250V, Slow Blow
Input Voltage.....115 + 15% VAC, 50/60 Hz
Operating Current.....0.8 Amps Typical

Output Relay Ratings	**Resistive**	**General Use**
	10A 110VAC	7.5A 110VAC
	7.5A 220VAC	5A 220VAC
	10A 30VDC	

Operating Current.....3.0 Amps Typical
Duty Cycle.....25% (10 Second Maximum
..... Continuous On-Time)
Stroke.....Travel Adjustable to 1.75 (1-3/4) Inches Max.
Mechanical Life.....Relay - 10 Million Operations
.....Rotary Solenoid - 100 Million Operations
Weight..... 3.5 Lbs.

SENSING PROBE (UNFORMED)

Part Number.....FCT-057
Wire Size.....156 Dia. x 20.438 inches Long
Materia..... 12L14 Carbon Steel Hex
Total Weight.....(Including Probe and Clamp)
.....0.15 lbs. Maximum Allowable

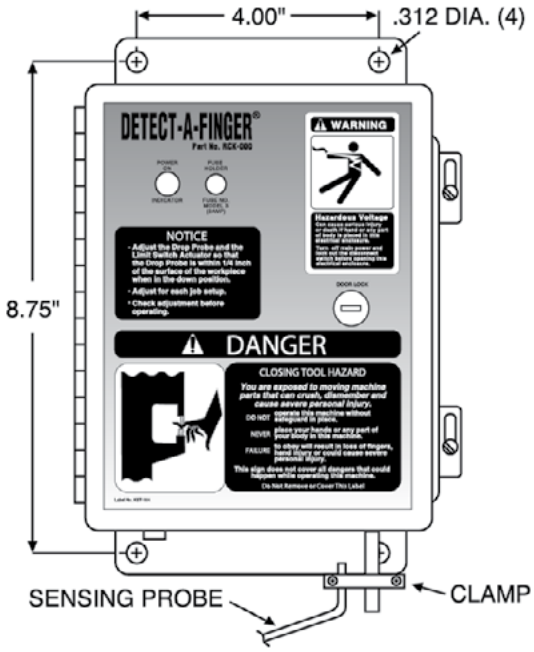

Left Side Mount Control Box
(Part No. RKC008)

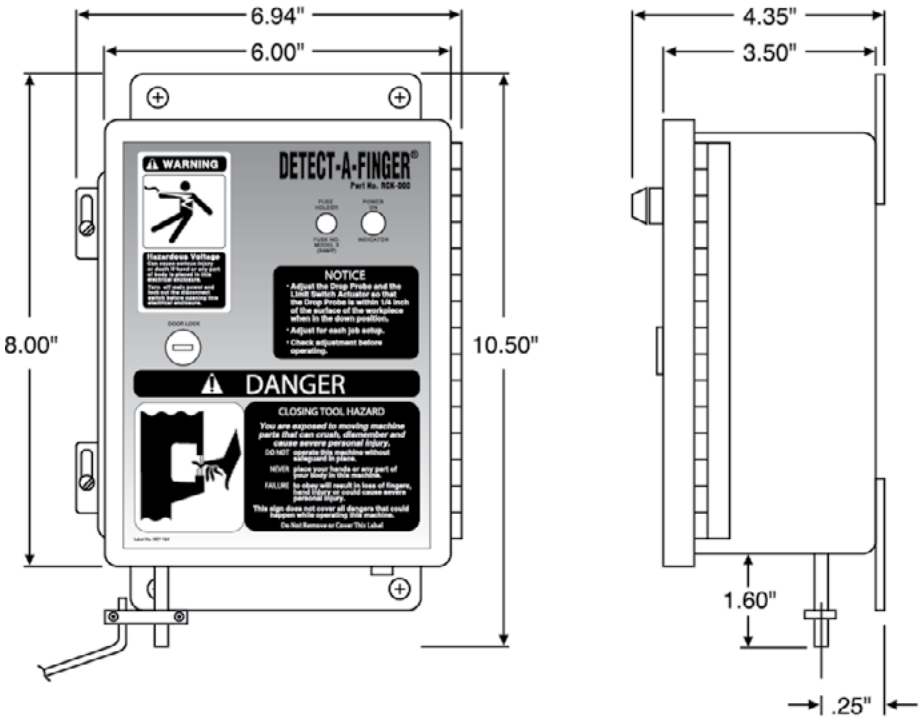

Right Side Mount Control Box
(Part No. RKC009)

RKC008 AND RKC009 SERIES (CONTINUED)

ADDITIONAL COMPONENTS

If the machine that is being safeguarded with an RKC or DAFseries drop-probe device has single-stroke capability, additional components may be required to trip or cycle the machine.

ADDITIONAL COMPONENTS	
PART NO.	**DESCRIPTION**
RCL001	50 lb Pull Air Cylinder – 1-1/8" Bore x 1" Stroke
RCL002	100 lb Pull Air Cylinder – 1-1/2" Bore x 1" Stroke
RCL003	200 lb Pull Air Cylinder – 2" Bore x 2" Stroke
RCD140	1/4" Monitored Dual-Solenoid Air Valve Assembly
RCL043	1/4" Filter-Regulator-Lubricator Assembly
RCD071	1/4" Air Lockout Valve
CTD011	Foot Switch Yellow
CTD088	Foot Switch Orange

Note: For push-type or longer stroke air cylinders, please consult the factory.

RCL001

RCL002

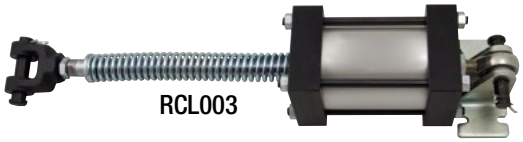
RCL003

RCD140

RCL043

SINGLE-STROKE TRIP-CONTROL SYSTEM

If the machine that is being safeguarded with an RKC or DAF series drop-probe device obtains its force from a flywheel but does not have a single-stroke mechanism, a component package can be furnished. For best safety practices, choose the control box and component package plus an appropriate sized air cylinder from above.

CONTROL BOX NO. FPF000-F PLUS	
COMPONENT PACKAGE NO. FNF011 CONSISTING OF:	
PART NO.	**DESCRIPTION**
RCD140	1/4" Dual-Solenoid Air Valve
RCL043	1/4" Filter-Regulator-Lubricator Assembly
CTD062	Air Pressure Switch
CML002	Cam and Strap Assembly
CMK103	Limit Switch Assembly
CTD011	Foot Switch Yellow
CTD088	Foot Switch Orange
HOS4000	Self-Latching Emergency Stop Palm Button

For fused disconnect switches or magnetic motor starters, please refer to Safety Shields catalog. Call us toll-free at 1-800-922-7533 or visit our Web site at www.rockfordsystems.com for the latest catalog.

RCD071

Foot Switch CTD011

Foot Switch CTD088

FPF000-F

CMK103

CML002

CTD062

HOS4000

RKC500 SERIES

FOR SAFEGUARDING RESISTANCE-TYPE SPOT WELDERS

The RKC500 series Detect-A-Finger® drop-probe device reduces accidents at the point of operation where an operator's fingers can enter. The key components of this device are a sensing probe module with the rod shaped to fit over or around the workpiece, and a control module. When the operator initiates a machine cycle, the sensing probe is released and drops by gravity over or around the workpiece. If the operator's fingers are still in the hazard area, the sensing probe will not reach its preset position and will not allow the spot welder to start its cycle. If there are no obstructions to prevent the sensing probe from dropping, when it reaches its preset position, the control unit will allow the machine to cycle.

The compact design of the sensing probe module allows it to be attached to the welder arm. The drop-probe stroke is 15/8".

Rocker-Arm Welder

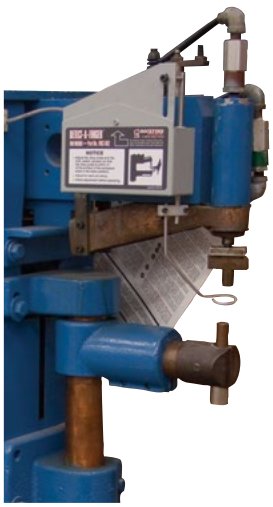

Air-Operated Welder

TYPICAL APPLICATION: PRESS-TYPE RESISTANCE WELDER

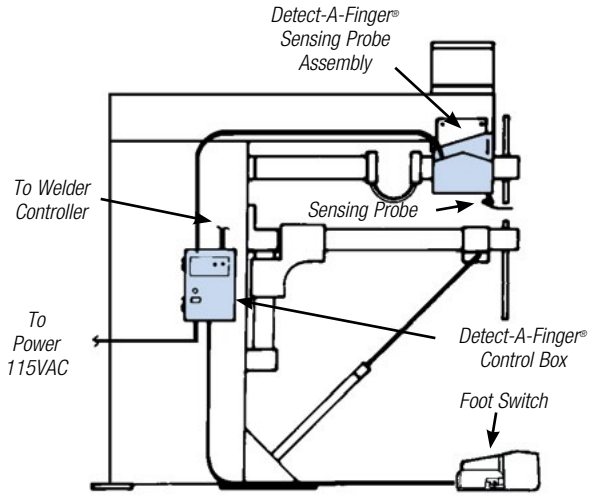

This Detect-A-Finger® drop-probe assembly may be mounted either to the moving member of a welder (upper arm), like the rocker-arm type illustrated above, or may be mounted to a fixed part of a welder, like the press-type illustrated above. Depending on the type of welder, a single-stage or a two-stage foot switch may be required.

The Detect-A-Finger® may also be applied to mechanical foot pedal-type welders. To convert from a mechanical operation, the mechanical pedal must be removed and replaced with an air cylinder to operate the arm and foot switch. The cylinder bore and stroke (push- or pull-type) can be determined from actual machine measurements, and the method and location of attachment to the welder linkage. The air cylinder can be controlled by a three-way normally closed 115 VAC solenoid air valve. Adjustable flow control valves may be employed to smooth the welder arm movement, and an air filter-regulator-lubricator assembly may also be required.
See previous page for these components.

RKC500 SERIES (CONTINUED)

COMPONENTS

The RKC500 Detect-A-Finger® device for spot welders consists of two components: the control box (mounted on the frame of the welder) and the drop-probe assembly (mounted on the upper arm).

The control box provides interface of the Detect-A-Finger® device to the spot welder's control system.

In addition to the control box, each unit is furnished with two plain 18" aluminum drop-probe rods. These rods are to be shaped by the user to specific requirements. To prevent welding splash, additional lightweight clear plastic shielding can be attached to the rod. Complete installation instructions and a maintenance manual are provided with each assembly. Insulated mounting hardware for the probe unit is also included.

A single-stage foot switch with a fully guarded top and sides is also available, if required. Foot switch Part No. CTD011 has a die-cast cover that protects the top and sides, and the front is protected by a hinged flap. These features protect from unintentional operation. (If a two-stage foot switch is required, please consult the factory).

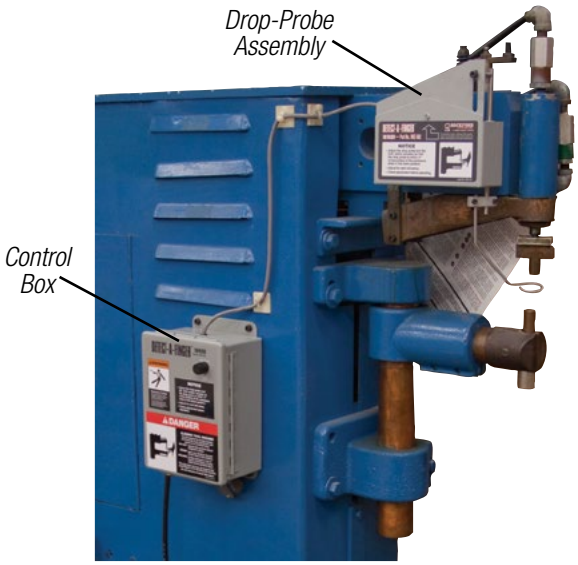

Foot Switch CTD011

Foot Switch CTD088

DANGER SIGNS FURNISHED WITH ALL DETECT-A-FINGER UNITS

Operator safety precautions and a danger sign are furnished (in English unless otherwise requested) with each drop-probe device.

Part No. KSC000 (English)

Part No. KSC000S (Spanish)

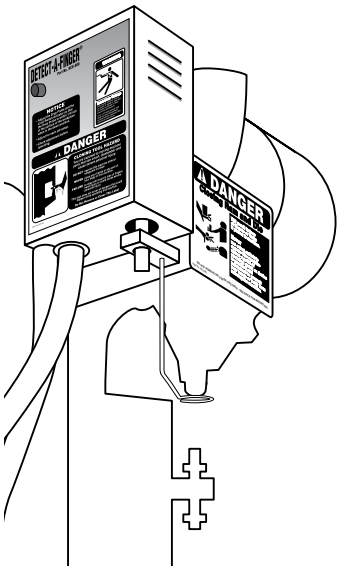

Operator Safety Precautions for Metal Forming Machinery

Size is 81⁄2" x 11". A hole is provided in the upper corner for attaching purposes.

Danger—Closing Ram and Die

Size is 5" x 6" x .055" thick

Part No. KSC055 (English)

Part No. KSC055S (Spanish)

DAF100 SERIES

ADJUSTABLE STROKE DETECT-A-FINGER® DROP-PROBE DEVICE FOR SAFEGUARDING RIVETERS, SPOT WELDERS, EYELETTERS, STAKERS, STAPLERS, CRIMPERS, FASTENING AND ASSEMBLY MACHINES

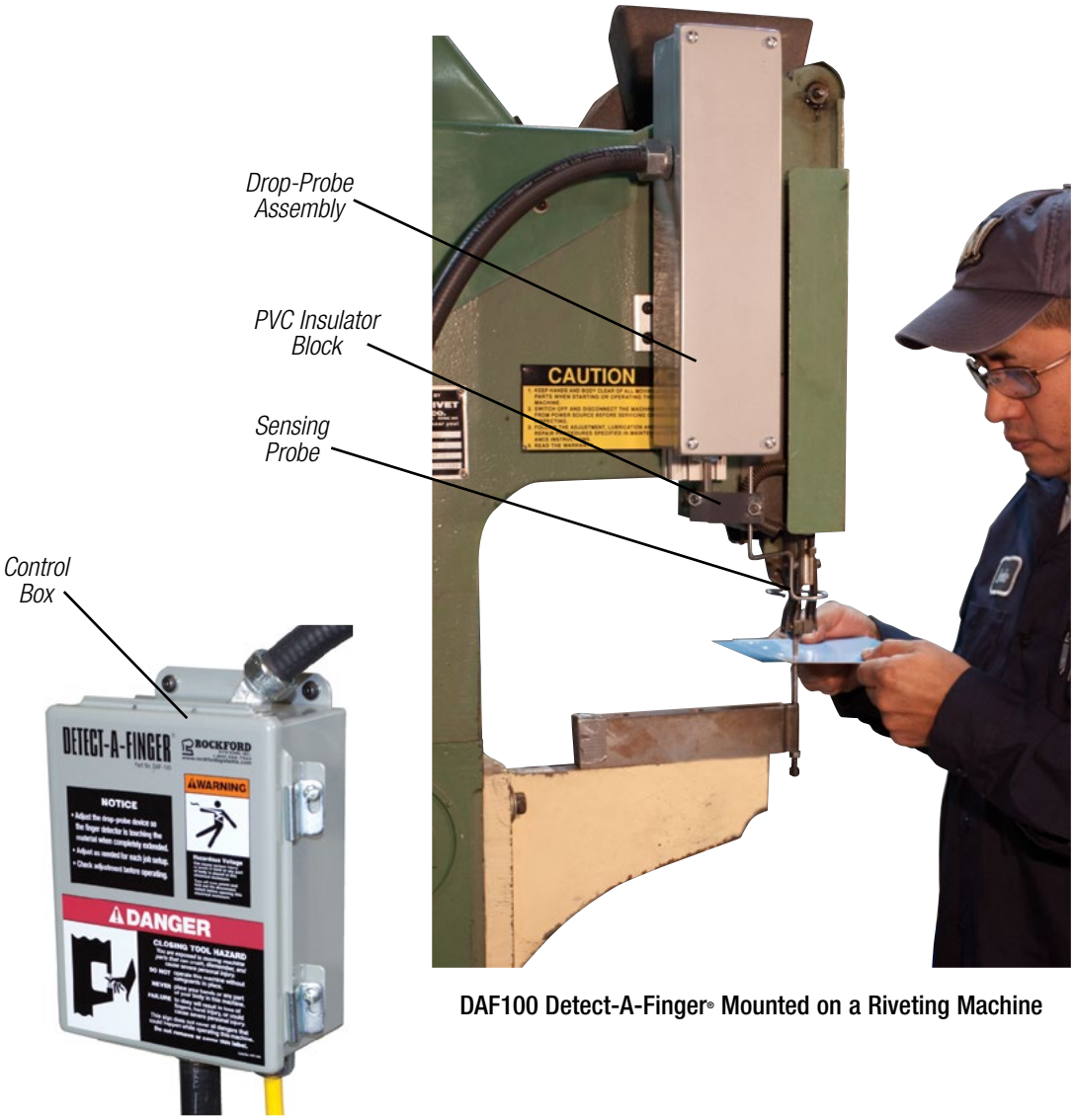

DAF100 Detect-A-Finger® Mounted on a Riveting Machine

The DAF100 Detect-A-Finger® drop-probe device is an electric-air system that consists of two main components: the drop-probe assembly and the control box. The standard unit can provide a stroke of up to 4" and can be mounted on the left or right side of the machine. Location of the DAF100 should be determined by the availability of the mounting surface, the size or shape of the workpiece, and the throat depth of the machine.

The drop-probe assembly functions by allowing the sensing probe to drop around the point-of-operation hazard prior to each intended machine cycle. If the sensing probe encounters the operator's fingers and fails to drop to a preset position, the machine cycle will not be initiated. If there are no obstructions to prevent the sensing probe from dropping, then the control unit will allow the machine to cycle when the sensing probe reaches the preset position.

DAF100 SERIES (CONTINUED)

COMPONENTS

The DAF100 system consists of two main components: the drop-probe assembly and the control box. The drop-probe assembly consists of an air cylinder and solenoid operated air valve with an adjustable down stop locking collar, limit switch, magnetic proximity switch, and a PVC insulator block. The control box consists of a control circuit board, safety relays, and pin-type plug-in terminals.

Each DAF100 system is furnished with one mini air filter, two mini air regulators, 25' of 5⁄32" PVC tubing, 4' of 1" x 2" extruded aluminum for mounting, and two plain 18" aluminum sensing probes. These sensing probes are shaped by the user to the workpiece or assembly requirements. Complete installation instructions and a maintenance manual are provided with each assembly.

ADDITIONAL COMPONENTS

Additional components may be required to trip or cycle the machine that is being safeguarded with the DAF100 drop-probe device. See page 52 for these additional components.

Inside View of Control Box

Mini Air Filter and Air Regulators

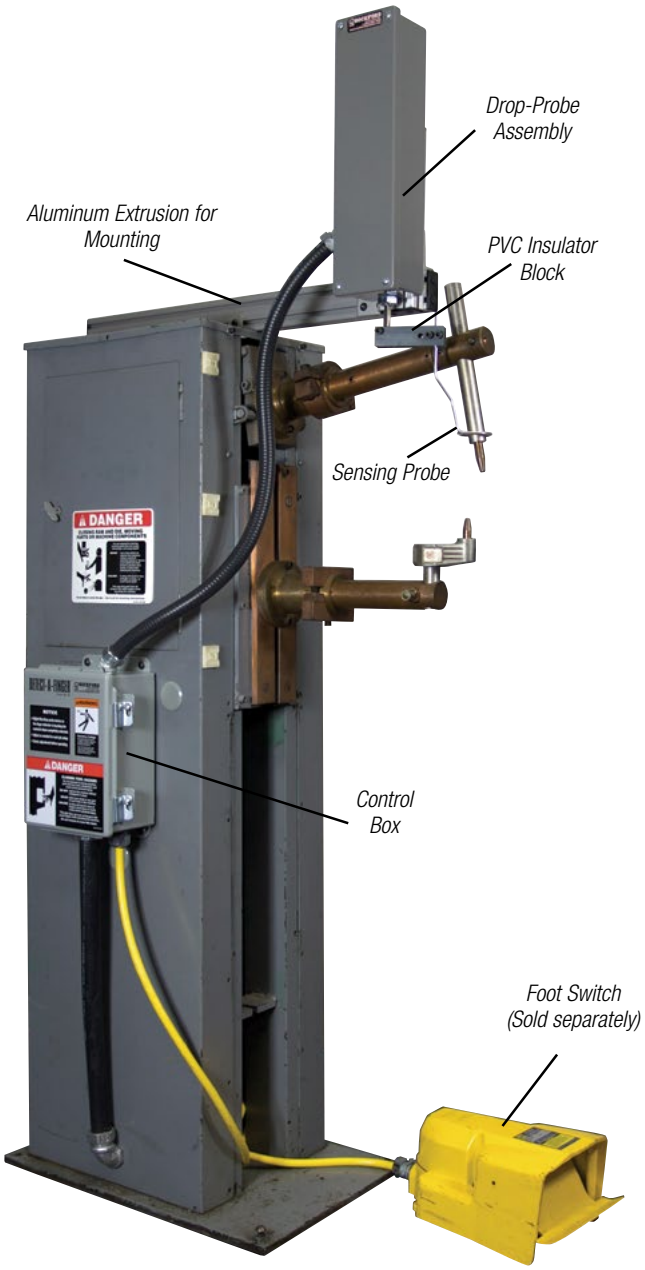

DAF100 Detect-A-Finger® Mounted on a Spot Welder

Inside View of Drop-Probe Assembly (Cover has been removed for photo)

UNITROL SOFT TOUCH

THE DANGER OF PINCH-POINT HAZARDS

Riveting and resistance (spot) welding are essential processes in the successful manufacturing of products in fast-paced industries including aerospace, marine, garments, railcar and automotive. Unfortunately, pinch point accidents involving these machines are all-too-common. These types of accidents occur when rivet heads or welding electrodes are driven together at forces up to 12,000 PSI while an operator's hands are pinched between them, leading to mangled, crushed or severed fingers.

According to OSHA, hand injuries account for nearly one-third of the thousands of disabling on-the-job accidents occurring each year. Most of these hand injuries are the result by pinch point accidents – 80 percent of them in fact. Since pinch points are the root of such a large number of hand injuries, it's best to install viable pinch-point safety on the two machines where these injuries commonly occur: resistance welders and riveters.

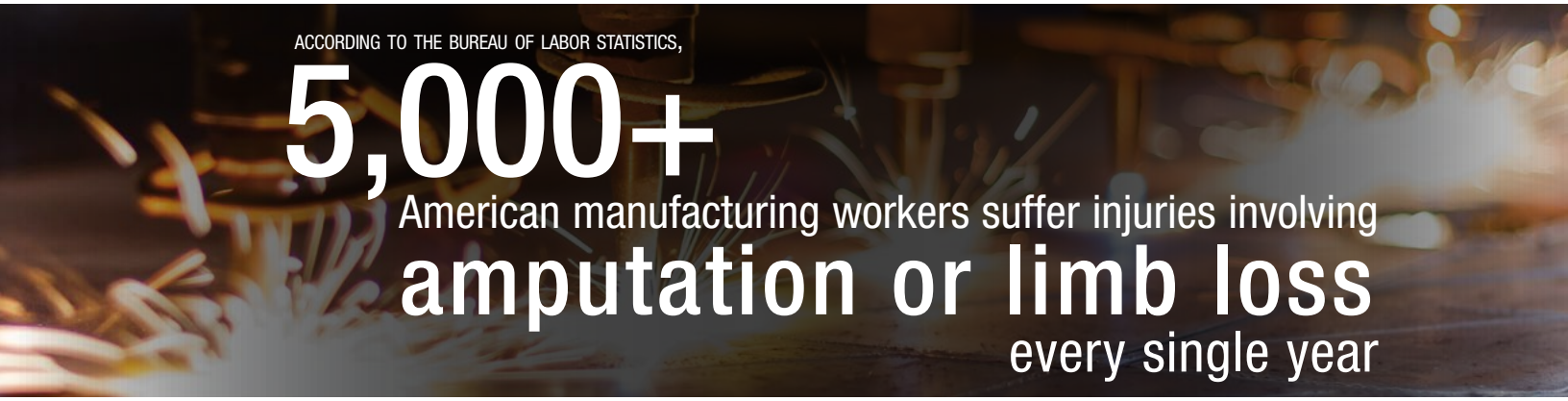

THE SOFT TOUCH PROMISE: REDUCE INJURIES WITHOUT SACRIFICING PRODUCTIVITY

The SOFT TOUCH Pinch-Point Safety System is the first and only fully passive safeguarding system designed to prevent a riveter, spot welder or other small machine from applying full force if it detects fingers in the machine's point-of-operation area. SOFT TOUCH prevents hand injuries and eliminates associated expenses such as hospitalization, lost days of work, higher insurance premiums and legal action. It does all this while not slowing down manufacturing operations. OSHA-compliant SOFT TOUCH technology will take you from pinch point to pinch-proof without losing a minute of productivity.

UNRIVALED PINCH-POINT SAFETY THROUGH SENSOR TECHNOLOGY

UNITROL's outstanding quality and reliability, combined with the SOFT TOUCH's advanced sensors and tamper-proof operation, come together to create a best-in-class pinch-point safety system.

Unique to the industry, the SOFT TOUCH measures electrical continuity between electrodes to verify they are actually touching the part to be welded — and not the operator's fingers. If anything other than metal is present between the electrodes, their sensors will not detect continuity and the electrodes will open automatically. This simple step prevents the machine from delivering high-pressure riveting or welding force onto the operator's fingers. In addition, a display instantly warns the operator of the danger. SOFT TOUCH has proven far more effective than traditional safeguarding methods such as ring guards or light curtains. In fact, thousands of SOFT TOUCH systems have been installed around the world with a 100 percent safety record.

Because time is money, SOFT TOUCH does not waste either. When continuity is detected between the electrodes – meaning only metal is present – full riveting or welding force is applied and operations proceed normally without delay. No time-consuming operator adjustments, such as replumbing the air system to change the pneumatics, are required. Also, SOFT TOUCH will automatically compensate for any changes in transformer tap switch position or line voltage shifts, preventing production from being abruptly stopped.

As with all safeguarding equipment, proper installation is critical. The experienced safeguarding professionals at Rockford Systems can install your SOFT TOUCH system and train your operators on its safe use.

ROCKFORD SYSTEMS, LLC

HOW SOFT TOUCH WORKS

1. The welding electrodes close under **low force.** The unique pneumatic systems designed by UNITROL for the process can counter-balance the weights of the ram on large press welders. Even where the dead-weight of the welder ram is hundreds of pounds, the electrode force produced will be 50 pounds or less.

No Weld,
Electrodes Open

3. If metal is ***not*** detected, the electrodes open automatically and do not go to welding force. A display tells the operator the problem.

...Checking for Metal

2. The welding control checks to see if metal has been detected between the electrodes within a customer set maximum time limit.

Weld Complete

4. If metal ***is*** detected, full welding force is applied and the weld proceeds normally.

KEY BENEFITS:

1. Fail Safe Operation:
   - If any of the system sensor wires become shortened or disconnected, the SOFT TOUCH system will lock out and not let the electrodes close, or the riveting or welding sequence to continue
   - If the SOFT TOUCH sensor board detects electrode continuity before the foot switch or hand switches are closed, the system will lock out and not allow any electrode movement
2. No Operator Adjustments:
   - Workers cannot remove, circumvent or tamper with any part of the system
   - No operator set components
   - Does not require any adjustments when new setups are made
   - No user calibration, just install and turn power ON
3. No Operator Bypassing:
   - The continuity system cannot be overridden and is in place at all times that the welding machine is under power
4. Primary System:
   - Can be used as the primary pinch-point safety system because it is fully passive
5. Full-Electrical Redundancy:
   - All inputs and outputs require closure of both electro-mechanical and solid-state redundant components for fail safe operation. Self-monitors output relay to prevent any operation if a fault in the output contacts is detected
   - When welding a C-shaped part that is not fully closed and requires electrode force to push the parts together, a limit switch can be added to the riveter or welder, and be adjusted to close when the space between the electrodes is less an ¼ inch. In this case, two actions are required before the electrode force increases and the rivet or weld sequence starts
6. Does Not Stop Production:
   - Automatically compensates for changes in transformer tap switch position or line voltage shifts

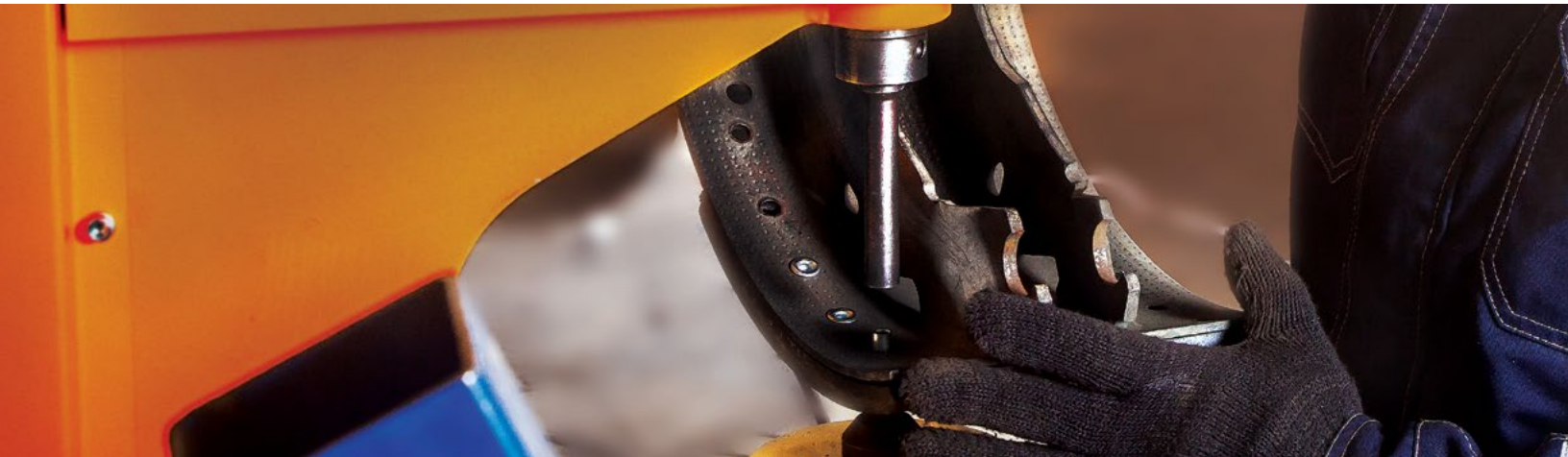

TYPES OF MACHINES:

Works with All Types of Welders:

- SOFT TOUCH systems are available for all resistance welders, including spot welders, projection welders, seam welders and transgun welders; 1Ø AC, 1Ø DC secondary, 3Ø frequency converters, 3Ø DC rectified secondary, and MFDC (inverters)

Works with All Types of Riveters:

- SOFT TOUCH systems are available for pneumatic riveters

Other Machine Types:

- Pneumatic clinching machines, Eyeletters, Stakers, Crimpers, Fastening and Assembly Machines

Complete System:

- SOFT TOUCH replaces the existing solenoid valves and is supplied in a single NEMA-4 enclosure that is factory prewired and pre-plumbed

Options:

- All options shown below can be ordered with the SOFT TOUCH system. They can also be easily added later in the field without modification of the control.
  1. Retract Kit to be used on all resistance welders that have a RETRACT (Hi-Lift) function
  2. Timed Bypass Switch for use with poor-conductive material
  3. Limit Switch for use with poor-conductive material or for redundant sensors
  4. Pressure Regulator Kit

COMPLIANCE:

- OSHA 1910.212(a) – General Machinery
- OSHA 1910.255(b)(4) – Resistance Welding Machines
- OSHA 1910.217(c)(3)(iii) – Presence Sensing Point of Operation Device
- ANSI B11.19-2010 (8.7) (Safeguarding Methods Standard)
- ANSI B154.1-1995 (Rivet Setting Equipment)

WARRANTY:

All UNITROL products include a 5-year prorated warranty. The warranty periods are determined using the date of the new control from original ship date. Please refer to the product manual for more information on the warranty.

PART NO.	DESCRIPTION
115VAC	RST300-115-RIVET
230VAC	RST300-230-RIVET

FUNCTION-TESTING CHECKLIST FOR LIGHT CURTAINS

This is a generic function-testing checklist. Your two-hand control may have other features that require different tests. Please refer to your two-hand control installation manual.

Make sure that the two-hand control has been interfaced properly to the machine's control system to provide control reliability.

DANGER **Never** place your hands or any part of your body in the hazard area while performing these tests.

Always perform these tests at every setup, operator, and shift change, as well as every time after maintenance is performed.

1. Make sure that the light curtain is mounted at the proper safety distance in accordance with the ANSI safety-distance equation. (See the next page for the safety-distance equation.)
2. Verify that someone cannot reach over, under, or around the sensing field of the light curtain to reach the hazard. Additional guards or safeguarding devices, if necessary, must protect these areas.
3. Turn on the machine and the light curtain. The green status-indicator light on the transmitter should be on and the red status-indicator light should be off. If the light curtain has a float-blanking feature, make sure that it is turned off. If fixed blanking is provided and used, this feature can remain on, and the blanked area should be occupied with an object that fills this entire space across the sensing field.
4. Use a test rod or other object sized according to the light curtain's minimum object sensitivity (sometimes referred to as the resolution) to confirm that all the channels in the sensing field are working properly. To do this, move the test rod through the sensing field in a pattern as illustrated to the right. The red status-indicator light on the transmitter should stay on during the entire test.
5. With the machine on and ready to be cycled in a production mode of operation, hold the test rod in the sensing field and attempt to cycle the machine. The machine should not cycle.
6. Cycle the machine and then quickly insert the test rod in the sensing field. The machine should stop immediately.

Note: On some machines, the light curtain is muted during the nonhazardous portion of the machine cycle. If the test rod is inserted in the sensing field while the light curtain is muted, the machine will not stop. Therefore, be sure to insert the test rod during the hazardous portion of the cycle when performing this test.

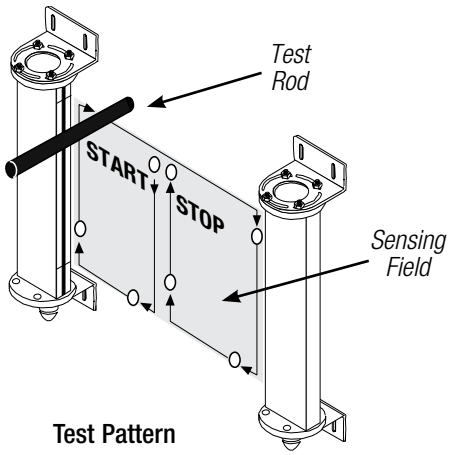

Test Pattern

7. Confirm that when the test rod is removed from the sensing field, the machine does not restart automatically.
8. Verify that in order to start another cycle (or continue a cycle that was interrupted), the normal actuating means must be reinitiated; or, if someone can pass through the sensing field and stand inside the safeguarded area, verify that the light curtain or machine control must be manually reset before reinitiation of the normal actuating means. The reset device must be located outside of the safeguarded area (so it cannot be reached from within) and within view so the operator can verify that no one is inside the safeguarded area.
9. If any of these function tests fail, take corrective action before running production. If all tests pass, remove all keys from the selector switches before running production.

SAFETY DISTANCE FOR LIGHT CURTAINS

The safety-distance equation from Annex D of ANSI B11.19-2010, Performance Criteria for Safeguarding, is as follows:

$$Ds = K(Ts + Tc + Tr + Tspm) + Dpf$$

Where:

Ds	= safety distance
K	= maximum speed that an individual can approach the hazard (63 inches/second is commonly used)
Ts	= stopping time of the machine measured at the final control element
Tc	= reaction time of the control system
Tr	= reaction time of the light curtain and its interface
Tspm	= additional time allowed for the stopping-performance monitor to compensate for variations in normal stopping time
Dpf	= amount of penetration allowed by the light curtain into its sensing field before someone is detected

The value of Dpf can be found using one of the following figures, and it can then be used in the safety-distance equation above.

Figure 1: D_{pf} for light curtains used in a vertical application with object sensitivity less than or equal to 2.5 inches (64 millimeters)

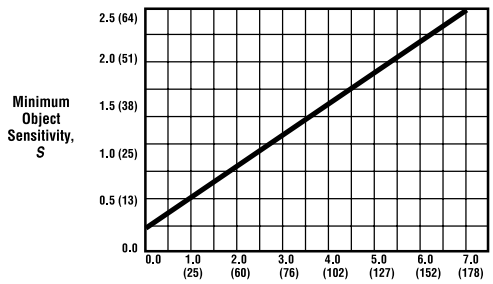

$D_{pf} = 3.4\ (S - 0.275)$ in
($D_{pf} = 3.4\ (S - 7)$ mm)

Dpf, the distance added to the safety distance due to the penetration factor, compensates for varying object sensitivities of light curtains.

When blanking features are used and when the blanked area is not completely filled by the workpiece or by mechanical guarding, the object sensitivity can be calculated as follows:

> Object sensitivity = size of the blanked area plus minimum object sensitivity without blanking.

Once this value is found, then determine Dpf.

If the entire blanked area is filled with mechanical guarding or other fixed material or guards, use the light curtain's object sensitivity to determine Dpf.

Figure 2: D_{pf} for light curtains used in a vertical application with object sensitivity greater than 2.5 inches (64 millimeters)

For light curtains using large blanked areas, or if an individual can otherwise reach through or over the sensing field and not be detected, the distance between any two adjacent detection points shall not be greater than 24 in (600 mm), i.e., from one active point to the next active point above.

If the individual cannot reach over the top of the sensing field and the bottom of the sensing field (A) is no more than 12 in (300 mm) above the floor.

Reach Through
D_{pf} = 36 in (900 mm) for reach-through applications

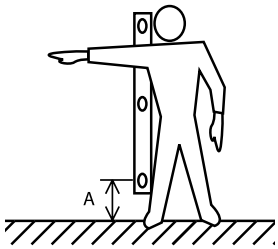

The top of the sensing field (B) is between 36 and 48 in (900 and 1200 mm) above the floor. The bottom of the sensing field (A) is no more than 12 in (300 mm) above the floor.

Reach Over
D_{pf} = 48 in (1200 mm) for reach-over applications

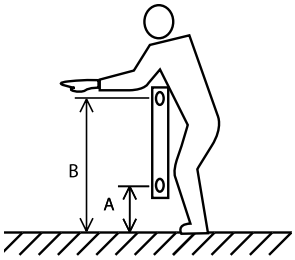

Note: Where individuals can place themselves between the safeguarding device and the hazard zone and remain undetected, additional measures must be taken.

Figure 3: D_{pf} for light curtains used in a horizontal application (30° or less) that can be reached over

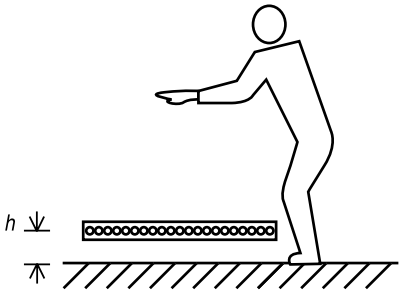

Reach Over
D_{pf} = 48 in (1200 mm) for horizontal sensing-field applications without vertical sensing.

Allowable Sensing-Field Heights in Inches (Millimeters)

Object Sensitivity (*S*)	Mounting Height (*h*) Minimum	Mounting Height (*h*) Maximum
< 2 (50)	0	39 (990)
2.5 (64)	7.5 (190)	39 (990)
3 (76)	15 (380)	39 (990)
3.5 (89)	22.5 (570)	39 (990)
4 (102)	30 (760)	39 (990)
4.25 (108)	33.75 (860)	39 (990)
4.6 (117)	39 (990)	39 (990)

Minimum mounting height (*h*) can also be determined by the following:

$h = 15\ (S - 2)$ in

$h = (S - 50)$ mm

where S is the object sensitivity.

Note: The light curtain's horizontal coverage must be enough to hinder an individual from stepping over its sensing field. This minimum distance is 36 in (900 mm) if supplemental safeguarding or physical barriers are used such that an individual cannot step over and clear the sensing field, and 48 in (1200 mm) if no supplemental safeguarding or physical barriers are used.

FUNCTION-TESTING CHECKLIST FOR TWO-HAND CONTROL

This is a generic function-testing checklist. Your two-hand control may have other features that require different tests. Please refer to your two-hand control installation manual.

Make sure that the two-hand control has been interfaced properly to the machine's control system to provide control reliability.

DANGER **Never** place your hands or any part of your body in the hazard area while performing these tests.

Always perform these tests at every setup, operator, and shift change, as well as every time after maintenance is performed.

1. Before turning the machine on, verify that:
   a. The hand controls are protected against unintended or inadvertent operation. This is usually done with ring guards or fabricated shields. (If the hand controls are nonmechanical such as capacitive or optical touch buttons, make sure that only an operator's hands can actuate them and not other parts of his or her body.)
   b. The hand controls are separated by enough distance or configured to require the use of both hands.
   c. The hand controls are fixed in position at the proper safety distance. (See the safety-distance equation below.)
   d. Two individual hand controls are provided for each operator that is to be safeguarded by two-hand control. When there are multiple two-hand control stations, there must be an indicator at each station to indicate whether the station is on or off (usually accomplished with an indicator light), and the means of turning the station on and off must be supervisable (usually done with a key-operated selector switch).
2. With the machine on and ready to be cycled in the single-cycle mode of operation, perform the following tests.
   a. Actuate both hand controls and keep them actuated. The machine should make one complete cycle and then it should stop, even though the hand controls are still being actuated.
   b. Actuate both hand controls and release them while the machine is still in the hazardous portion of its cycle. The machine should stop. Both hand controls must be continuously actuated during the hazardous portion of the cycle.
   c. Actuate both hand controls and release only one control during the hazardous portion of the cycle. The hazardous motion of the machine should stop. Reactuate the hand control that was released. The machine should not finish the cycle. Repeat this with the other hand control. Again, the machine should not finish the cycle. Both hand controls must be released and reactuated before the machine can finish the cycle.

   d. If the two-hand control has a concurrent timer: Actuate one hand control, wait until the concurrent time limit has expired, and then actuate the other hand control. The machine should not cycle. The hand controls must be actuated concurrently within a certain time limit (usually 0.5 seconds or less) before a machine cycle can be initiated.
   e. If the machine is equipped with multiple two-hand control stations, turn off all stations and make sure that the machine does not cycle. Also perform the above tests at each two-hand control station.
3. If any of these function tests fail, take corrective action before running production. If all tests pass, remove all keys from the selector switches before running production.

The safety-distance equation for two-hand control from Annex D of ANSI B11.19-2010, Performance Criteria for Safeguarding, is as follows:

$$Ds = K(Ts + Tc + Tr + Tspm)$$

Where:

Ds	= safety distance
K	= maximum speed that an individual can approach the hazard (63 inches/second is commonly used)
Ts	= stopping time of the machine measured at the final control element
Tc	= reaction time of the control system
Tr	= reaction time of the two-hand control and its interface
Tspm	= additional time allowed for the stopping-performance monitor to compensate for variations in normal stopping time

FUNCTION-TESTING CHECKLIST FOR TWO-HAND TRIP

This is a generic function-testing checklist. Your two-hand control may have other features that require different tests. Please refer to your two-hand control installation manual.

Make sure that the two-hand control has been interfaced properly to the machine's control system to provide control reliability.

DANGER **Never** place your hands or any part of your body in the hazard area while performing these tests.

Always perform these tests at every setup, operator, and shift change, as well as every time after maintenance is performed.

1. Before turning the machine on, verify that:
   a. The hand controls are protected against unintended or inadvertent operation. This is usually done with ring guards or fabricated shields. (If the hand controls are nonmechanical such as capacitive or optical touch buttons, make sure that only an operator's hands can actuate them and not other parts of his or her body.)
   b. The hand controls are separated by enough distance or configured to require the use of both hands.
   c. The hand controls are fixed in position at the proper safety distance. (See the safety-distance equations below.)
   d. Two individual hand controls are provided for each operator that is to be safeguarded by two-hand trip. When there are multiple two-hand trip stations, there must be an indicator at each station to indicate whether the station is on or off (usually accomplished with an indicator light), and the means of turning the station on and off must be supervisable (usually done with a key-operated selector switch).
2. With the machine on and ready to be tripped in the single-cycle mode of operation, perform the following tests.
   a. Actuate both hand controls and keep them actuated. The machine should make one complete cycle and then it should stop, even though the hand controls are still being actuated.
   b. If the two-hand trip has a concurrent timer: Actuate one hand control, wait until the concurrent time limit has expired, and then actuate the other hand control. The machine should not cycle. The hand controls must be actuated concurrently within a certain time limit (usually 0.5 seconds or less) before a machine cycle can be initiated.
   c. If the machine is equipped with multiple two-hand trip stations, turn off all stations and make sure that the machine does not cycle. Also perform the above tests at each two-hand trip station.
3. If any of these function tests fail, take corrective action before running production. If all tests pass, remove all keys from the selector switches before running production.

The safety-distance equations for two-hand trip from Annex D of ANSI B11.19-2010, Performance Criteria for Safeguarding, are as follows:

For machines with full-revolution clutches that have one or more clutch-engagement points:

$$Ds = KTmc\ (1/2 + 1/N)$$

Where:

Ds = safety distance

K = maximum speed that an individual can approach the hazard (63 inches/second is commonly used)

Tmc = time it takes to complete a machine cycle

N = number of engagement points on the flywheel

For other machines that are tripped to initiate a cycle that cannot be stopped until the completion of the cycle:

$$Ds = KThm$$

Where:

Ds = safety distance

K = maximum speed that an individual can approach the hazard (63 inches/second is commonly used)

Thm = the time, after initiation of motion, until hazardous motion is completed

OSHA GUARD-OPENING REQUIREMENTS

Table 0-10 details the maximum permissible openings for guards as required by OSHA 29 CFR 1910.217 for mechanical power presses. A guard-opening sign is available that can be used by engineering, maintenance, etc., for reference when designing or fabricating guards. This 10” x 12” sign is made of .055”-thick semi-rigid plastic and can be mounted with nails, screws, nylon lock-strips, etc.

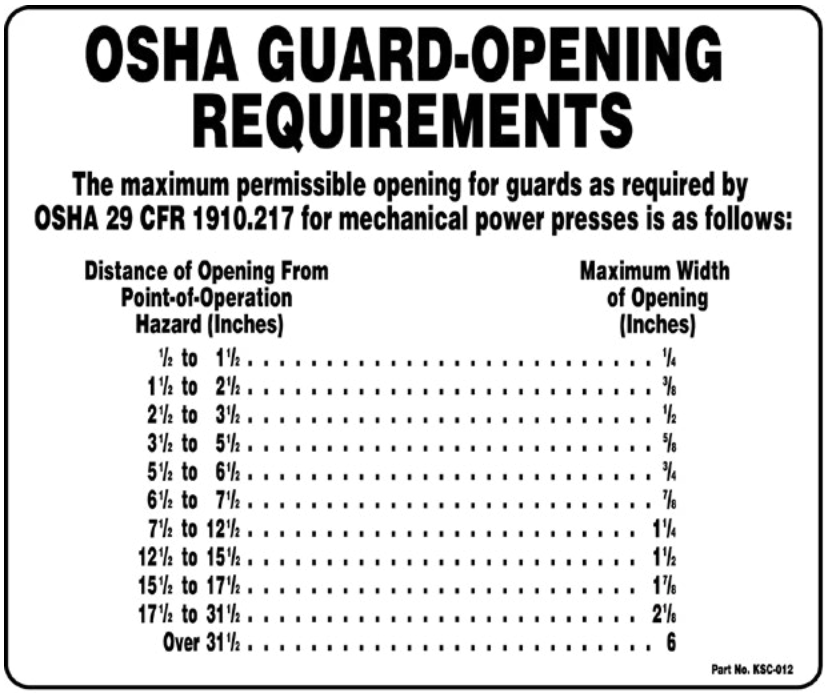

OSHA GUARD-OPENING REQUIREMENTS

The maximum permissible opening for guards as required by OSHA 29 CFR 1910.217 for mechanical power presses is as follows:

Distance of Opening From Point-of-Operation Hazard (Inches)	Maximum Width of Opening (Inches)
½ to 1½	¼
1½ to 2½	⅜
2½ to 3½	½
3½ to 5½	⅝
5½ to 6½	¾
6½ to 7½	⅞
7½ to 12½	1¼
12½ to 15½	1½
15½ to 17½	1⅞
17½ to 31½	2⅛
Over 31½	6

Part No. KSC-012

Part No. KSC012
OSHA Guard-Opening Requirements Sign

ANSI GUARD-OPENING REQUIREMENTS

The maximum permissible opening for guards as required by Annex D of ANSI B11.19-2010, Performance Criteria for Safeguarding, is as follows:

As a function of gap size in millimeters (inches)				As a function of distance in millimeters (inches)			
Known Gap		Minimum Distance		Known Distance		Maximum Gap	
0–6	(0–0.24)	13	(0.5)	< 13	(< 0.5)	Not permitted	
6.1–11	(0.25–0.375)	64	(2.5)	13–63.9	(0.5–2.49)	6	(0.250)
11.1–16	(0.376–0.625)	89	(3.5)	64–88.9	(2.5–3.49)	11	(0.375)
16.1–32	(0.626–1.250)	166	(6.5)	89–165.9	(3.5–6.49)	16	(0.625)
32.1–49	(1.251–1.875)	445	(17.5)	166–444.9	(6.5–17.49)	32	(1.250)
49.1–132	(1.876–5.000)	915	(36.0)	445–914.9	(17.5–35.99)	49	(1.875)
> 132	(> 5.0)	Not permitted		≥ 915	(≥ 36.0)	132	(5.000)

GUARD-OPENING SCALES

An OSHA or ANSI guard-opening scale can be used during the design, installation, and inspection of barrier guards to make sure they comply with the OSHA and ANSI guard-opening requirements. These engraved, acrylic copolymer guard-opening scales are available online at www.rockfordsystems.com.

OSHA GUARD-OPENING SCALE—PART NO. KSC097

This folding guard-opening scale is based on Table O-10 of OSHA 29 CFR 1910.217 for mechanical power presses, which shows the distances that guards shall be positioned from the point of operation based on opening size. It is constructed of acrylic copolymer and has permanent etched markings.

OSHA Guard-Opening Scale – Part No. KSC097

ANSI GUARD-OPENING SCALE—PART NO. KSC098

This folding guard-opening scale is based on "A Review of Machine-Guarding Recommendations" by Donald R. Vaillancourt and Stover H. Snook of the Liberty Mutual Research Center for Safety and Health. The ANSI/RIA R15.06 safety standard for industrial robots and robot systems, as well as recently revised ANSI B11–series safety standards for machine tools, use the guard-opening data from this study. The Canadian power press standard, CSA Z142-02, also uses the data from this study. One side of the scale shows English units; the other side shows metric units. It is constructed of acrylic copolymer and has permanent etched markings

ANSI/CSA Guard-Opening Scale – Part No. KSC098

SAFETY DISTANCE GUIDE

Many OSHA and ANSI safety requirements must be met before installing two-hand control or a presence-sensing device as a point-of-operation safeguard. One requirement is that the control or device must be located at a minimum safety distance from the point of operation. This safety distance guide slide chart can be used to calculate the safety distance for these devices. The minimum safety distance is based on the stopping ability of the machine and a hand-speed constant, in addition to other factors.

Safety Distance Guide Slide Chart
Part No. LLL050

MACHINE SAFEGUARDING SEMINARS INTRODUCTION

According to safety standards, when a machine creates a hazard to operators and other employees in the machine area, it must be safeguarded. We offer this machine safeguarding seminar to educate people in positions of responsibility how to properly safeguard the point of operation and other machine hazards to meet OSHA regulations and current industry standards.

This comprehensive 21/2-day seminar provides knowledgeable interpretations of the performance language of both OSHA (Occupational Safety and Health Administration) and ANSI (American National Standards Institute) standards. Twenty-four ANSI B11-series safety standards and other related standards are covered.

Classroom discussions are combined with a PowerPoint presentation and live demonstrations of machines to help attendees understand when and where safeguarding is required and how various safeguarding works. The teaching methods used and the material covered during the 21/2 days will help attendees determine compliance issues with their machinery and processes.

The metal-turning portion of this seminar primarily focuses on the ANSI requirements for chuck shields and chip/coolant shields on manually operated machines. Safeguarding by distance and location are also covered, as well as awareness barriers and devices, pressure-sensitive mats, emergency-stop devices, drop-probe devices, color-coding, warning signs, and training requirements.

Using ANSI/RIA R15.06 as a guideline, safeguarding methods for robots are discussed. This section includes the newly incorporated risk assessment/hazard analysis. An overview and interpretation of OSHA 1910.147 Lockout/Tagout and STD 1-7.3 are also included.

TRAINING CENTER

Our training center contains a number of machines including mechanical and hydraulic power presses, press brakes, an engine lathe, a vertical mill, a drill press, a pedestal grinder, a spot welder, and riveter. These machines are under power for demonstration purposes. Most of the demonstration machines are equipped with multiple types of safeguards to show how different guards and devices can be applied and used. Hands-on opportunities abound!

TRAINING INSTRUCTORS

Our instructors are well qualified, having many years of exposure to the machine-tool industry. Their experience comes from working in the field with plant engineers, safety directors, and plant managers. Instructors are also involved in the observance of the various draft stages of ANSI B11-series safety standards for machine tools.

SEMINAR MATERIALS

Each person attending the seminar receives a variety of information regarding machine safeguarding which includes the following:

- OSHA 29 CFR 1910.211, 1910.212, 1910.217, and 1910.219
- Pertinent ANSI B11 standards
- Charts and graphs for future reference
- Safeguarding product catalogs
- U.S. Department of Labor memorandums
- Mechanical power press safety information card
- Safety distance guide slide chart
- Folding OSHA and ANSI guard-opening scales
- Laminated function-testing checklists for safeguards

REGISTRATION INFORMATION

Please consult the factory or our Web site for the registration fee. This fee includes the seminar presentation and demonstrations, seminar materials including a safety distance guide, guard-opening scales, food and beverages during breaks, lunch on the first two days, and a certificate of completion. The registration fee does not include other meals, lodging, or transportation.

To enroll, call 1-800-922-7533, or register online at www.rockfordsystems.com.

SEMINAR SCHEDULE

The machine safeguarding seminar is usually held on the third Tuesday, Wednesday, and Thursday of each month. (Thursday's session ends midmorning.) All seminar dates and times are subject to change. Please call the seminar registrar to confirm seminar dates before making travel arrangements.

CONFIRMATION

Each attendee will receive a package of detailed information prior to attending. Maps and a list of hotels are provided for students to make their own hotel reservations.

LOCATION

The seminar is held at our Rockford, Illinois, plant, which is located 65 miles northwest of Chicago O'Hare Airport.

ON-SITE AND SPECIAL GROUP SEMINARS

Machine safeguarding seminars can be presented at your company and tailored to the types of machines in your plant. We can also conduct special seminars at our facility for your group or company. Please contact our training department for details.

NOTES

ROCKFORD SYSTEMS, LLC

5795 Logistics Parkway, Rockford, Illinois 61109 United States
1-800-922-7533 | 815-874-7891
www.rockfordsystems.com

RSTKSSD/012023